LESSMANN®

THE GERMAN BRUSH COMPANY

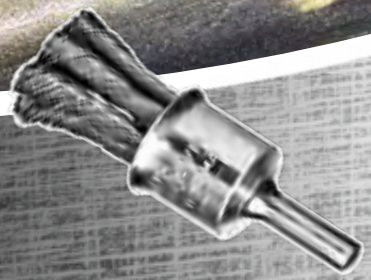

2020

CATALOGUE

QUALITY MADE IN GERMANY

LESSMANN®
THE GERMAN BRUSH COMPANY

4 - 7 Information

8 - 13 Technology, Material and Safety

14 - 41 **Wheel Brushes**

Knot Wheel Brushes, Joint Cleaning Brushes, Pipeline Brushes, Cutback Brushes, Single Segment Brushes, Wheel Brushes, Brushes for the wood machining industry, Special Models, Accessories

42 - 51 **Deburring Brushes**

Deburring Brushes, Roller Brushes, Deburring End Brushes

52 - 65 **Cup and Bevel Brushes**

Cup Brushes, Bevel Brushes, Brushes for grass trimmers, Low sparking brushes

66 - 83 **Shank Brushes**

Wheel Brushes with Shank, Cup Shank Brushes, End Brushes, Miniature Brushes

84 - 103 **Hand Brushes and Brooms**

Hand Brushes Standard, Special Hand Brushes, Spark Plug Brushes, Fine Scratch Brushes, Grill brushes, Special Models, Brooms and Scrubs, Dusters, Weed Brushes and Weed Brooms

104 - 125 **Interior Brushes**

Mikro Interior Brushes, Interior Brushes, Cylinder Brushes, Hole Cleaning Brushes, Bore Hole Cleaning Brushes, Tube and Sleeve Brushes, Boiler Brushes, Stove Pipe Brushes, Accessories, Fitting Brushes, Brushes and Scratchers

126 - 135 **DIY Brushes and Sales Promotion**

Do It Yourself Brushes, Packaging and Presentation, Sales Promotion

136 - 157 **Industrial Brushes**

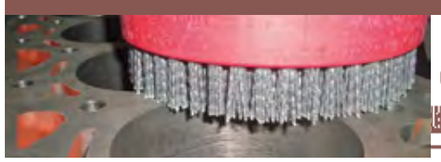

Brushes with carbon fibre, High Performance Filament Brushes, Staple Set Brushes, Disc Brushes, Lath Brushes, Wheel Brushes and Wide Face Brushes, Strip Brushes

166 - 169 Article Numbers

169 Keyword Index

THE GERMAN BRUSH COMPANY

Dear customers,
dear interested parties,

for more than 70 years, the name LESSMANN stands for a medium-size family business with high-quality surface finishing tools "Made in Germany". We thank our partners and valued customers for their support! Through seven decades of experience we are able to provide you with the highest quality and innovative products. The latest knowledge and ideas are combined in-house and implemented to first-class products for our customers worldwide.

Retailers receive a wide assortment of **standard goods** for fair prices. **Industrial customers** may expect **custom-made products** which agree upon the special demands in their production processes. Permanent product improvements, working with innovative raw materials and being willed to break through technical limits again and again brings us new possibilities to create the best solutions for you.

Also this year we have published our new catalogue for you. In addition to minor optical modifications, we further developed our product range and added new products to the catalogue as standard. These include brushes with PBT filament for use on grass trimmers (page 62), an extensive range of brushes for the barbecue season (page 92) and our HFB range, which we have technically optimised and expanded for you (page 140).

At start of 2019 Leesmann acquired the company Robert Thaler, which now gives us opportunity and expertise to offer our existing and new customers an extensive range of strip and sealing brushes to suit many applications. The name "Robert Thaler" will remain a brand of Lessmann GmbH and will carry the "Made in Germany" logo which ensures the customer of a quality product everytime. Further product information can be found on pages 152-157

In addition to our new product range, we continued to invest in our production and administration plants in Oettingen. The production plant has had major investments in new machinery in order to expand our capacity and improve production techniques. A new administration building is under construction which will give our employees a modern working environment and also create space for growth and employee and customer training.

Reliable service, fast reaction times, selected local partners as well as constantly growing know-how of our qualified and committed employees - with these strengths we want to be your competent partner for technical brushes also in the future as THE GERMAN BRUSH COMPANY.

We stand with our name for the achievements and decisions in the company.

Yours

Jürgen Lessmann Dieter Lessmann

LESSMANN®
THE GERMAN BRUSH COMPANY

QUALITY, FAIRNESS, RELIABILITY

To do the right things to the right time: the success of our company nowadays is based on contributions and entrepreneurial decisions in the past. This day, we, as a family enterprise in the third generation, are facing new customer demands and market statues, react flexible and work efficient, to gear our company up for the future!

Quality, Fairness and Reliability are the most important values in the relation to our customers and partners, since Johann LESSMANN and its children Edgar and Traudel founded a small brush factory in Oettingen.

Strict quality management, uncompromising customer orientation and decades of experience make up the foundation of our success. One of the most important strengths are our 240 qualified and motivated employees, who are willing to get into new challenges, react flexible and to bring in their knowledge und competence. That's how we work together to have a mutual success.

THE GERMAN BRUSH COMPANY

FUTURE-ORIENTED INVESTMENT

An important investment into the future is the construction of our new 4,200 sqm production hall in 2013: this step is a visible sign of our stable growth. We set another milestone in 2016 by the enlargement of our high rack storage area and in 2019 we started with the construction of a new administration building. These steps are a visible sign of our stable growth.

Besides the new building shows our intention to assure our position as leading technological and qualitative company and to strengthen it by opening new markets! Furthermore we have more space and capacities for producing more industrial special solutions – of course in our usual best quality and accuracy!

MADE IN GERMANY

Quality made in Germany. For LESSMANN that does not only mean, that all our products are manufactured in Bavaria, but also the huge part of all raw materials as filament, wood, metal or plastics are purchased from renowned suppliers in Germany.

We manufacture almost all products in a broad standard program on our own. That's why already the quality of the raw materials has a significant role. Intensive test of the materials and inspections during production, build up two important values of the reliable LESSMANN-quality.

The headquarters in Germany requesting us to be the pioneer when using modern technology and automation. Thus our customers can receive the best quality at competitive prices.

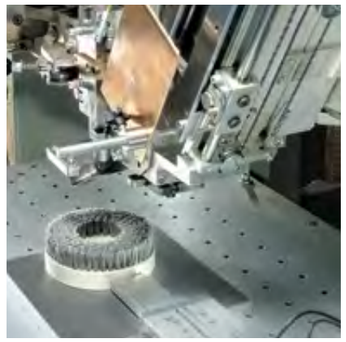

PEFC Certification System

PEFC is a transparent and independent certification system to ensure sustainable forest management. Due to the regional approach, the system is particularly suitable for all forest owners, especially the family forest enterprises typical in Germany. An inspection is carried out by independent experts and ensures compliance with the standards.
Lessmann uses PEFC certified wood, e. g. in hand brushes that come from a regional forest that is managed sustainable or complies with PEFC standards.

PEFC/04-31-0389

Promoting sustainable forest management
www.pefc.de

LESSMANN®
THE GERMAN BRUSH COMPANY

FIT FOR THE GLOBE

First-class quality products, expertise and a high flexibility – our innovative technical brushes are "Fit for the Globe".

Depending on the country we work with our own employees, regional importers or authorised retailers. Our export department has the accurate know-how, to consult and satisfy the demand of our customers globally.

In 2016 we launched a foreign branch in the USA. The „LESSMANN Inc." guarantees optimal service and logistics and our approved first-class products on the American market.

PERFECT SERVICE FOR PERFECT PRESENTATION

The brand LESSMANN signifies quality and gives clearly structured information.

Please have a look at our home page in the internet!
On www.lessmann.com you will find our latest catalogue as well as leaflets to download. Further technical advice as well as operating instructions are available.

Self-service Tool Bar Displays
Take advantage of our experience and use this idea that will lead to successful and increased sales.

INDIVIDUAL SOLUTIONS FOR SPECIAL APPLICATIONS

Often technical brushes for very special applications are requested. Devarnishing surfaces or rounding burrs. Each application is different and a standard tool could not be used in each case.

Every day we develop new brushes for industrial demands. In the majority of the cases, the aim of the operator is to increase productivity. Our experienced consultants will help you to make the right choice and to find the appropriate design of the brushes for your individual needs.

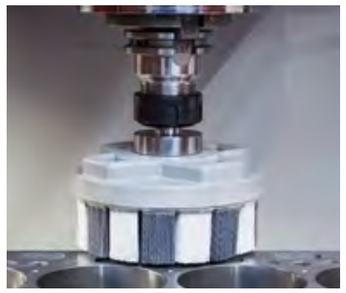

"SIMPLY THE BEST" BY TESTING

Our own production of nearly all components of our standard programme and our own development of special articles enables us to have an excellent knowledge in both manufacturing quality and safety testing.

Creating Innovation,
Exceeding Safety Standards,
Keeping Top Quality

With this motivation we make complex development and product tests as an essential part of our work.

Material Tests
These are the first steps of our quality management: All deliveries of raw material are tested according to and above specification details. All wires are tested for their tensile strength and for their reverse bending strength by a fatigue measuring process.
Beside the quality of the material it is important that its attributes are as suitable as possible for their intended use.

Imbalance Test
An imbalance of machine driven brushes is not pleasant and is dangerous for the health of persons working at the machine.
Although it is not necessary under the DIN or the EN Norms, we produce our brushes according to our own standards for minimum imbalance. By doing so our customers take advantage of smooth running fatigue reducing brushes. Our employees in production ensure that these high quality aspects are maintained.

Safety Tests
According to European safety norms all brushes have to with-stand 1.5 times of the mentioned maximum RPM. Naturally when developing a brush, we test every brush type for this safety aspect. Only if all tests are satisfactory, can the article be produced. During production many samples are taken of the brushes in order to check the required safety speed. Should a model or a raw material be changed we begin the tests again. For this very reason every customer can rely on a high quality and safe tool.

Lifetime and Power
For the measurement of the lifetime and power of technical brushes there are neither norms nor standard procedures. After long developing processes and many tests we have found testing methods that simulate testing in real working conditions. On self built machines we are able to test the abrasion and thus the lifetime and power of machine driven brushes.
Beside the quality aspect these tests are helpful in optimising materials used, as well as component parts and the construction of brushes. Even if in comparison tests with competitor brushes such testing has shown and proved the high quality of our products:

We keep on testing to guarantee customer satisfaction.

Quality is our feature!

Accredited with DIN EN ISO 9001:2015

RECOMMENDATIONS FOR SAFE BRUSH USE

LESSMANN Quality is Safe
We guarantee the best quality and long lifetime for our products.
Our brushes are manufactured according to the existing standard EN 1083-2 and ANSI 165.1. All the relevant machine driven brushes are checked for occupational safety using a centrifugal force test.

Safety Information
All machine driven brushes require as with other rotary tools, that the required safety precautions are kept:

Safety for Your Body
All operators and other personnel in areas where rotary brushes are being used must wear safety goggles or face shields and protective clothing.

For your own safety:
Wear personal protective equipment

Brush Check
The brushes should be checked for damage before using.

A correct mounting is imperative.

Peripheral Speed
The max. RPM indicated in the catalogue are safety figures by which the brushes can be used without danger. Please do not exceed these figures under any circumstances! In most cases a lower RPM is sufficient to gain an optimal result.

Correct Pressure
The schedule shows the necessary motor drive power for different brush diameters. The brushes need only a light pressure while brushing because only the wire points are effective (please look at the schedule). A higher pressure does not improve the brushing effect. In fact the brush lifetime is reduced and greater power is needed. The indicated curves inform you about the expected power. The power ratings refer to a brush with 30 mm width.

Working with Shank Brushes
When working with shank brushes please note that the shank has to be inserted fully into the tool.
This is especially necessary when working with high RPM, for example on straight grinders and pneumatic tools.

Mechanical Application of interior brushes
Only use the brush with the indicated maximal peripheral speed (RPM max.). The max. RPM only is allowed when the brush is clamped min. for 10 mm into the tool. When the brush is inserted into the suitable work piece, higher RPMs are possible. **Only use the brush right rotating.**

Correct

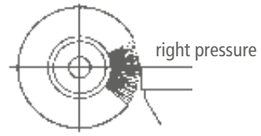

Incorrect

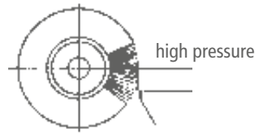

Machine usage:
These symbols in the chapters show on which machines the brushes usually are used.

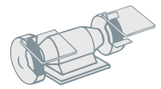

Stationary equipment

Angle grinder

Straight grinder

Drilling machine

Grass trimmer

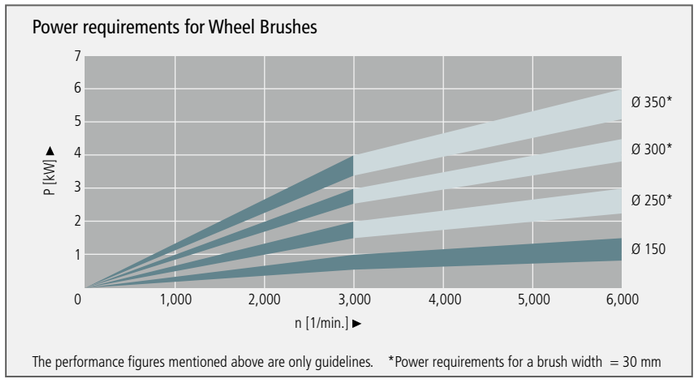

The performance figures mentioned above are only guidelines. *Power requirements for a brush width = 30 mm

minimum bore size for wheel brushes according to DIN EN 1083

Diameter of the brush in mm	Minimum diameter of bore in mm
50	4.6
75	6.5
100	10
150	13
200	16
250	20
300	20
350	32

Recommended use of brushes on angle grinders – the right combination

Common idle speed of angle grinders (WS)	Brush diameter	60	65	75	80	90	100	115	125	150	178	200
	Knot Wheel Brush						WS 1	WS 1	WS 2	WS 3	WS 4	WS 5
Ø 115 11,000 RPM = WS 1	Cup Brush, Crimped Wire	WS 2		WS 2	WS 3		WS 3		WS 5	WS 5		
Ø 125 11,000 RPM = WS 2	Knot Cup Brush without Bridle		WS 1	WS 2	WS 2	WS 2	WS 3/4		WS 5			
Ø 150 9,000 RPM = WS 3	Knot Cup Brush with Bridle				WS 3/4		WS 3/4		WS 5			
Ø 180 8,500 RPM = WS 4	Knot Bevel Brush						WS 1					
Ø 230 6,500 RPM = WS 5	Knot Bevel Brush						WS 1	WS 1				

Warning: Before each operation please compare the idle speed of the angle grinder with the max. peripheral speed of the brush!

PRODUCING QUALITY – BRUSHING THE CORRECT WAY

Optimise Brush Results
The brush diameter and filling length are most important for the perfect brushing result. It is therefore very easy to eliminate almost all bad brushing results:

Brushing effect too weak:
- Increase the peripheral speed by increasing the brush diameter or the operating speed, but never exceed the maximum RPM rating.
- Use a brush with shorter trim length.
- Use a brush with larger wire diameter.

Brushing effect too powerful:
- Reduce the peripheral speed by reducing the brush diameter or the operating speed.
- Use a brush with longer trim length.
- Use a brush with smaller wire diameter.

Brush transfers burr:
- Use a brush with shorter trim length.
- Examine brush and work piece position.
- Use a brush with wider face.
- Use a brush with thicker wire diameter.

Information for brushing on stainless steel materials you find at **www.lessmann.com**

Note: you are welcome to contact our technical contact persons.

Recommended Peripheral Speed for Brushing Application

	Peripheral Speed in m/s							
Application	15	20	25	30	35	40	45	50
With Filaments								
Removing Burrs				25 - 35				
Cleaning Welds						35 - 45		
Removing Scale						35 - 45		
Polishing					30 - 40			
Working on Plastic	15 - 20							
With Abrasive Filaments								
Dry conditions	16 - 18							
Wet conditions			25 - 30					

Conversion mm in Inches and I.S.W.G.

Brush diameter	
Millimeter	Inches
25	1"
50	2"
75	3"
100	4"
125	5"
150	6"
180	7"
200	8"
250	10"
300	12"
350	14"

Wire diameter		
Millimeter	Inches	I.S.W.G
0.08	0.0031	44
0.10	0.0039	42
0.12	0.0047	40
0.15	0.0059	38
0.20	0.0079	36
0.25	0.0098	33
0.30	0.0118	31
0.35	0.0138	29
0.40	0.0157	27
0.50	0.0197	25
0.80	0.0315	21

Peripheral Speed v in m/sec. (please follow the max. rotary speed of the brush!)

n [1/min.]	Brush diameter d in mm/inches							
(RPM)	50 2"	80 3"	100 4"	125 5"	150 6"	200 8"	250 10"	300 12"
1,000		4.2	5.2	6.5	7.9	10.5	13.1	15.7
1,500	3.9	6.3	7.9	9.8	11.8	15.7	19.6	23.6
2,000	5.2	8.4	10.5	13.1	15.7	20.9	26.2	31.4
2,500	6.5	10.5	13.1	16.4	19.6	26.2	32.7	39.3
3,000	7.9	12.6	15.7	19.6	23.6	31.4	39.3	47.1
3,500	9.2	14.7	18.3	22.9	27.5	36.7	45.8	55.0
4,000	10.5	16.8	20.9	26.2	31.4	41.9	52.4	62.8
5,000	13.1	20.9	26.2	32.7	39.3	52.4	65.4	78.5
6,000	15.7	25.1	31.4	39.3	47.1	62.8	78.5	
8,000	20.9	33.5	41.9	52.4	62.8	83.8		
10,000	26.2	41.9	52.4	65.4	78.5			
12,500	32.7	52.4	65.4	81.8				
15,000	39.3	62.8	78.5					
20,000	52.4	83.8						
25,000	65.4							

$$\text{Peripheral Speed} \quad v = \frac{\text{Brush diameter (d)} \times \pi \times \text{Peripheral Speed (n)}}{1{,}000 \times 60}$$

For **working in wet condition** we recommend **PA 6.12** as base. Please state on your order! Since the upcoming heat on wet applications is conducted, the peripheral speed can be set much higher than on dry applications.

BRUSH FILLING MATERIALS AND THE CHARACTERISTICS

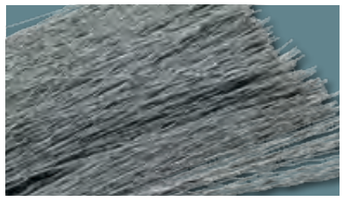

STA Steel Wire straight / crimped
is developed in co-operation with wire producers, so that it meets our special requirements. This wire is alloyed with manganese in order to increase its toughness. Result is higher tensile strength and longer lifetime of LESSMANN-Brushes.

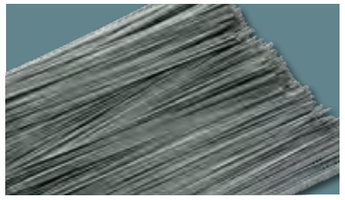

STH Steel Wire High Tensile straight / crimped
is most often used in Knotted Brushes, Deburring Brushes and Pipeline Brushes. Furthermore we offer this high tensile wire in our complete assortment. Above all it features through its tensile strength and high fatigue rates, what results in lifetime even for extreme brushing applications.

STM Brass Coated Steel Wire
For long lifetime plus high tensile strength and cutting performance. Best results in brushing and deburring applications.

STL Cord Wire
Brass coated steel wire corded. Longest lifetime for heavy duty brush applications e. g. deburring.

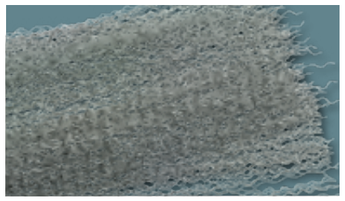

ROF / RO4 / ROL / RO8 Stainless Steel Wire
ROF must be used when working on stainless steel. Material number (WNr.) **1.4301 (AISI 304)**. This wire is resistant against corrosion and certain acids and bleaches.
RO4 Premium-quality stainless steel wire. WNr. **1.4401 (AISI 316)**
RO8 High heat resistant stainless steel wire. WNr. **1.4860**.
ROL Stainless Steel Wire with cord construction WNr. **1.4301/1.4310**

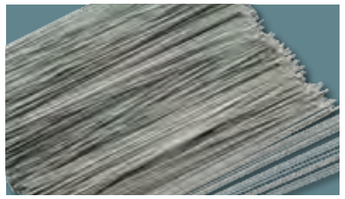

ROH Stainless Steel Wire High Tensile
This wire is characterized by a high tensile strength 2100 – 2500 and a long lifetime even in extreme applications. WNr. **1.4310 (AISI 301)**

Further information on brushing on stainless steel materials you find at **www.lessmann.com**

MES Brass Wire (CuZn)
is softer than steel wire. Among other applications brass wire is suitable for working with mild bleaches. It's mainly used for processing of nonferrous metals.

straight / crimped / knotted: Metal wires for brushes can be processed in brushes straight, crimped or knotted. Wire knots are always made with straight wires. Compared to a straight wire with the same diameter the wire knots are much stronger than the single wire. Crimped wires brace each other and therefore achieve a better stability in the brushes.

BRUSH FILLING MATERIALS AND THE CHARACTERISTICS

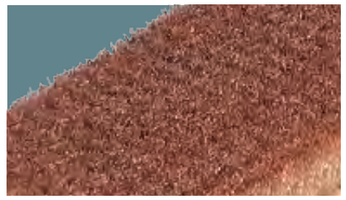

BRO Bronze Wire (CuSn)
is used for surface processing of wood and metal. It's also used when low-sparking brushes are needed.

NSI Nickel Silver (CuNiZn)
is used for polishing work pieces e. g. parts of nickel silver or brass, as it is softer than steel wire.

PP, PA, PE, PBT Synthetic Filaments
are resistant to abrasion and flexible. Despite minor resistance against heat these filaments are perfect for cleaning, grinding or surface pro-
cessing of metal, plastic or wood. Available are:
- Polypropylen (PP)
- Polyamid (PA) - PA 6, PA 6.6, PA 6.12
- Polyethylen (PE)
- Polyester (PBT); only for cleaning

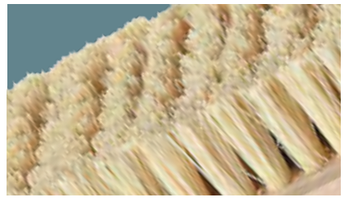

FIB Fibre
consists of heat resistant plant fibre, is slightly abrasive and therefore can be used for smooth grinding, above all for working on wooden surfaces. Moreover fibre is used for general cleaning and polishing work.

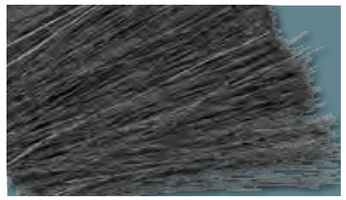

ROS Horse Hair
is an animal hair, which above all is deployed in terms of light cleaning and dusting work. Horse hair is resistant against diluted acids and bleaches. It's not chargeable for static electricity.

Encapsulated Brushes
Encapsulated brushes are ideal for an aggressive work on working pieces and for a very exact working in edges and angles.
By embedding steel wire, stainless steel wire, brass coated wire or brass wire in tough plastic, the filling width always remains the same and early break of the wires can be prevented. It's the perfect tool for long lasting and safe working. The advantages when working with encapsulated brushes are longer lifetime and harder brush effect.
Furthermore the risk of injury declines when using encapsulated brushes.
However, it might be possible that the brush will leave marks on the work piece.

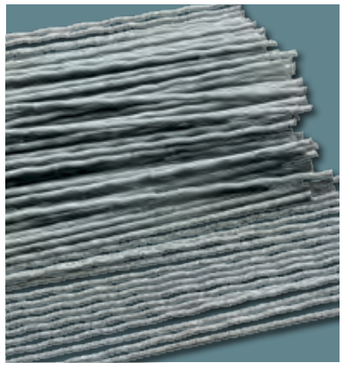

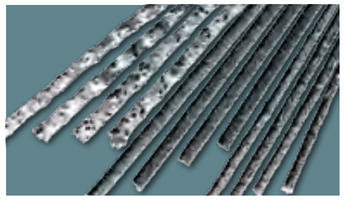

3 grits in silicon carbid

Abrasive Filaments
consist of polyamide bristles containing abrasive grits. This modern material is ideal for deburring work, fine surface finishing of plastic and metal parts as well as grinding, cleaning, polishing, and structuring of surfaces. With their flexible surface, brushes with abrasive filament align to the different shape of working pieces. Abrasive bristles also have grinding effects on the side, which makes them even more flexible to application possibilities. You can choose between grit (from K60 to K1000) composed of aluminium oxide (AO) and silicon carbide (SIC). Also diamond filament is available.

Normally 2 polyamide-types are used:
Polyamide PA 6:
- good bend recovery
- good abrasion resistance
- absorption of water to max. 10%

Polyamide PA 6.12 (ideal when working in wet surrounding):
- flexible and excellent bend recovery
- high abrasion resistance
- absorption of water to max. 3%

You can differ the bristles between round or flat bristles. Usually round bristles are used, because they are more flexible than flat bristles and very good for processing work pieces with strong shapes. Round bristles with a smaller diameter, less than 150 mm, are very efficient if you are not able to use flat material.
However, flat bristles possess a high abrasive grit, represent a long durability and a high removal rate by a larger contact surface.

Grits to choose from:

Abrasive filaments SIC (filament K60 to K1000):
- intensive results when deburring
- for surficial improvement/-processing
- mainly for process stainless steel and aluminium limited
- microhardness: 25.000 N/mm²

Common measurements: K 80/1,1, K 80/1,2, K 80/1,4, K 120/0,6, K 120/1,1, K 180/0,9, K 180/1,0, K 320/0,60, K 500/0,5

Abrasive filaments AO (filament K60 to K1000):
- less sharp-edged compared to SIC
- to the finish of soft metal
- to polishing and smoothing
- to process aluminium when smoothing or polishing
- microhardness: 21.000 N/mm²

Common measurements: K 80/1,2, K 120/1,1, K 180/0,9, K 180/1,0, K 240/0,75, K 240/0,90, K 320/0,60, K 500/0,25, K 500/0,50, K 600/0,3 – others on request.

Diamonds filaments(filament K60 to K1000):
- for aggressive applications
- used for materials with high material strength
- self-renewing through independent sharpening
- microhardness: 42.000 N/mm²

Ceramic grit:
- very good grinding and polishing properties
- maximum lifetime and aggressiveness
- working with hard metal tools
- microhardness: 42.000 N/mm²

All information on **chemical properties** can be found at
www.lessmann.com/index.php/en/content/view/full/282
in the area of Brush Know-How.

Physical Characteristics

	STA	STH	ROF	ROH	RO4	RO8	STM / STL	MES
WNr.			1.4301	1.4310	1.4401	1.4860		CuZn36 / CuZn37
AISI			304	301	316			
Tensile Strength in N/mm²*	1,800 - 2,100	2,300 - 2,500	1,800 - 2,100	2,100 - 2,500	1,600 - 1,800	1,600 - 1,800	2,300 - 2,600	900 - 1,200
Specific Gravity in g/cm³	7.85	7.85	7.85	7.85	7.85	7.90	7.85	8.50
Temperature Consistancy in °C	+ 300 °C	+ 300 °C	+ 450 °C	+ 450 °C	+ 500 °C	+ 600 °C	+ 300 °C	+ 180 °C

*The specified Tensile Strength is applicable for a wire strength 0.3 - 0.4 mm

LESSMANN

Knot Wheel Brushes

Knot Wheel Brushes
Knot wheel brushes for grinders, angle grinders and stationary machines used in the preparation and reworking of bolt fillet and butt welds. They remove scale, rust, paint, slag, rubber residue and can be used for deburring.

Knot Wheel Brushes with multiple Rows
Ready mounted brushes with multiple rows have a dense filling compared to single segment brushes, which are assembled together. In your order please state the width of the brush, bore size and type and thickness of wire.

The listed knot wheel brushes are for the use in stationary machines.

Stainless Steel Brushes
LESSMANN-brushes with stainless steel have green side plates. We use wire with material number 1.4310. Material number 1.4401 can be used on request.
Information on working on stainless steel you find at www.lessmann.com

All knots on our standard twisted wire wheel brushes are left hand twisted in order to minimize the undoing of the knots should the brush be used incorrectly.
On request we can supply right hand twist brushes.

In addition to brushes with left or right knotted, we also offer left-right knotted brushes.

Left-right knotted wheel brushes usually are more aggressive, hence they are often used for heavy brushing operations.
Besides the knots open less, therefore there are ideal for the treatment of edges.

User Tip:
We recommend to turn the brush during use in order to maintain sharpened wire ends.

On request other bores and wire diameter are available.

ZF = Knot type
Z = number of knots, R = number of rows

Item Nos. in bold are available ex stock.
Consider our minimum order value for *italic printed* article numbers (see page 164).

STM = brass coated steel, straight
STH = steel wire, high tensile, straight
ROH = stainless steel wire, high tensile, straight

Chunky packaging
Many articles you receive as standard in handy covering boxes with 10 pcs.

Knot types ZF

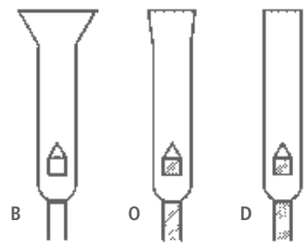

B: Rose Bud
O: Open Knot
(wire ends are cut)
D: Fully knotted
(wire ends are cut completely)

You can find our **tutorials** here:
www.lessmann.com/index.php/en/content/view/full/711

You can find our **Enquiry Forms** in the respecitve category under:
www.lessmann.com/index.php/en/content/view/full/61
or in the catalog from page 158

EAN

Knot Wheel Brushes, Steel Wire, Brass Wire

D mm | *inch*	A mm | *inch*	d mm | *inch*	H	Z	ZF	R	RPM max.	Pack.	**STH 0.35** | *0.014"* Art.-No.	**STH 0.50** | *0.020"* Art.-No.	**STH 0.80** | *0.031"* Art.-No.	**STM 0,50** | *0.020"* Art.-No.	*left-right knotted* **STH 0.50** | *0.020"* Art.-No.
75 | *3*	10 | *3/8*	13 | *1/2*	15	18	B	1	25,000	1	**470.111***	**470.211***			
100 | *4*	12 | *1/2*	M 14 x 2,0	22	18	B	1	12,500	1	**471.117***	**471.217***			
115 | *4 1/2*	14 | *1/2*	22.2 | *7/8*	24	20	B	1	12,500	1	**472.111***	**472.211***		**472.211.SM***	**472.211.WZ***
115 | *4 1/2*	14 | *1/2*	M 14 x 2,0	24	20	B	1	12,500	1	**472.117***	**472.217***			
125 | *5*	14 | *1/2*	22.2 | *7/8*	29	20	B	1	12,500	1	**473.111***	**473.211***		**473.211.SM***	**473.211.WZ***
125 | *5*	14 | *1/2*	M 14 x 2,0	29	20	B	1	12,500	1	**473.117***	**473.217***			**473.217.WZ***
125 | *5*	14 | *1/2*	22.2 | *7/8*	29	24	B	1	12,500	1		**473.211.24**			
150 | *6*	14 | *1/2*	22.2 | *7/8*	32	26	B	1	12,500	1	**474.111***	**474.211***	*474.311*		
150 | *6*	14 | *1/2*	M 14 x 2,0	32	26	B	1	12,500	1	*474.117**	**474.217***	*474.317*		
178 | *7*	14 | *1/2*	22.2 | *7/8*	38	32	B	1	12,500	1	**475.111***	**475.211***	**475.311**		
178 | *7*	14 | *1/2*	M 14 x 2,0	38	32	B	1	12,500	1	*475.117**	**475.217***	*475.317*		
200 | *8*	14 | *1/2*	22.2 | *7/8*	41	36	B	1	9,000	1	**476.111**	**476.211**	**476.311**		
200 | *8*	14 | *1/2*	50.8 | *2*	41	36	B	1	9,000	1		*476.210.51*	available on demand		
230 | *9 1/16*	14 | *1/2*	22.2 | *7/8*	56	40	B	1	9,000	1		*475.211*			
250 | *10*	15 | *5/8*	50.8 | *2***	42	52	O	1	5,000	1		**477.210.75**	*477.310.75*		
300 | *12*	15 | *5/8*	50.8 | *2***	56	58	O	1	5,000	1		*478.210.75*	*478.310.75*		

EAN

Knot Wheel Brushes, Stainless Steel Wire

D mm | *inch*	A mm | *inch*	d mm | *inch*	H	Z	ZF	R	RPM max.	Pack.	**ROH 0.35** | *0.014"* Art.-No.	**ROH 0.50** | *0.020"* Art.-No.	*left-right knotted* **ROH 0.50** | *0.020"* Art.-No.
100 | *4*	12 | *1/2*	M 14 x 2,0	22	18	B	1	12,500	1		**471.817***	
115 | *4 1/2*	14 | *1/2*	22.2 | *7/8*	24	20	B	1	12,500	1	**472.711***	**472.811***	**472.811.WZ***
115 | *4 1/2*	14 | *1/2*	M 14 x 2,0	24	20	B	1	12,500	1	**472.717***	**472.817***	
125 | *5*	14 | *1/2*	22.2 | *7/8*	29	20	B	1	12,500	1	**473.711***	**473.811***	**473.811.WZ***
125 | *5*	14 | *1/2*	M 14 x 2,0	29	20	B	1	12,500	1		**473.817***	
150 | *6*	14 | *1/2*	22.2 | *7/8*	32	26	B	1	12,500	1		**474.811***	
150 | *6*	14 | *1/2*	M 14 x 2,0	32	26	B	1	12,500	1		**474.817**	
178 | *7*	14 | *1/2*	22.2 | *7/8*	38	32	B	1	12,500	1		**475.811***	
178 | *7*	14 | *1/2*	M 14 x 2,0	38	32	B	1	12,500	1		**475.817**	

Thread 5/8" - 11 UNC on request | * packed 10 pieces per carton | ** with turtle bore

Knot Wheel Brushes, multiple rows

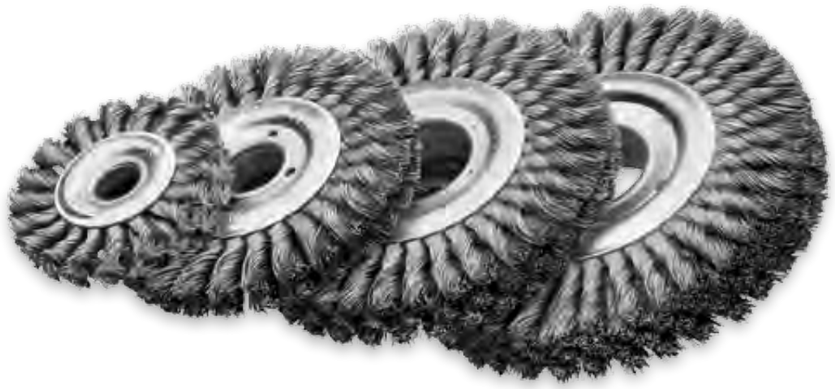

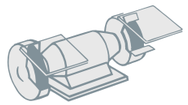

EAN

Knot Wheel Brushes, multiple rows

D mm | *inch*	A	EB	d Stand mm | *inch*	d min	H	ZF	Z x R	RPM max.	Pack.	**STH 0.35** *0.014"*	**STH 0.50** *0.020"*	**ROH 0.35** *0.014"*	**ROH 0.50** *0.020"*
100 | *4*	22-24	12	20 | *3/4*	10	21	B	20 x 2	12,500	1	*471.12K*	*471.22K*	*471.72K*	*471.82K*
100 | *4*	30-32	18	20 | *3/4*	10	21	B	20 x 3	12,500	1	*471.13K*	*471.23K*	*471.73K*	*471.83K*
100 | *4*	34-36	25	20 | *3/4*	10	21	B	20 x 4	12,500	1	*471.14K*	*471.24K*	*471.74K*	*471.84K*
115 | *4 1/2*	22-24	18	30 | *1 1/4*	10	23.5	B	22 x 2	12,500	1	*472.12K*	*472.22K*	*472.72K*	*472.82K*
115 | *4 1/2*	30-32	25	30 | *1 1/4*	10	23.5	B	22 x 3	12,500	1	*472.13K*	*472.23K*	*472.73K*	*472.83K*
115 | *4 1/2*	34-36	30	30 | *1 1/4*	10	23.5	B	22 x 4	12,500	1	*472.14K*	*472.24K*	*472.74K*	*472.84K*
125 | *5*	22-24	18	30 | *1 1/4*	13	28.5	B	24 x 2	12,500	1	*473.12K*	*473.22K*	*473.72K*	*473.82K*
125 | *5*	30-32	25	30 | *1 1/4*	13	28.5	B	24 x 3	12,500	1	*473.13K*	*473.23K*	*473.73K*	*473.83K*
125 | *5*	34-36	30	30 | *1 1/4*	13	28.5	B	24 x 4	12,500	1	*473.14K*	*473.24K*	*473.74K*	*473.84K*
150 | *6*	22-24	18	30 | *1 1/4*	13	31.5	O	28 x 2	12,500	1	*474.12K*	*474.22K*	*474.72K*	*474.82K*
150 | *6*	30-32	25	30 | *1 1/4*	13	31.5	O	28 x 3	12,500	1	*474.13K*	*474.23K*	*474.73K*	*474.83K*
150 | *6*	36-38	30	30 | *1 1/4*	13	31.5	O	28 x 4	12,500	1	*474.14K*	*474.24K*	*474.74K*	*474.84K*
178 | *7*	22-24	18	50 | *2*	16	37.5	O	34 x 2	12,500	1	*475.12K*	*475.22K*	*475.72K*	*475.82K*
178 | *7*	30-32	25	50 | *2*	16	37.5	O	34 x 3	12,500	1	*475.13K*	*475.23K*	*475.73K*	*475.83K*
178 | *7*	36-38	30	50 | *2*	16	37.5	O	34 x 4	12,500	1	*475.14K*	*475.24K*	*475.74K*	*475.84K*
200 | *8*	22-24	18	50 | *2*	16	41	O	38 x 2	9,000	1	*476.12K*	*476.22K*	*476.72K*	*476.82K*
200 | *8*	30-32	25	50 | *2*	16	41	O	38 x 3	9,000	1	*476.13K*	*476.23K*	*476.73K*	*476.83K*
200 | *8*	36-38	30	50 | *2*	16	41	O	38 x 4	9,000	1	*476.14K*	*476.24K*	*476.74K*	*476.84K*
250 | *10*	26-30	18	100 | *4*	20	42	O	52 x 2	5,000	1	*477.12K*	*477.22K*	*477.72K*	*477.82K*
250 | *10*	38-40	26	100 | *4*	20	42	O	52 x 3	5,000	1	*477.13K*	*477.23K*	*477.73K*	*477.83K*
250 | *10*	50-54	34	100 | *4*	20	42	O	52 x 4	5,000	1	*477.14K*	*477.24K*	*477.74K*	*477.84K*
300 | *12*	26-30	18	100 | *4*	30	56	O	58 x 2	5,000	1	*478.12K*	*478.22K*	*478.72K*	*478.82K*
300 | *12*	38-40	26	100 | *4*	30	56	O	58 x 3	5,000	1	*478.13K*	*478.23K*	*478.73K*	*478.83K*
300 | *12*	50-54	34	100 | *4*	30	56	O	58 x 4	5,000	1	*478.14K*	*478.24K*	*478.74K*	*478.84K*

Joint Cleaning Brushes

Joint Cleaning Brushes

D mm | *inch*	A mm | *inch*	d mm | *inch*	H	Z	ZF	R	RPM max.	Pack.	**STA 0.50** | *0.020"* Art.-No.	**STA 0.80** | *0.031"* Art.-No.	**STM 0.50** | *0.020"* Art.-No.
300 | *12*	6 | *1/4*	20 | *3/4*	67	64	D	1	5,000	5	**478.200.06**	*478.300.06*	*478.500.06*
300 | *12*	8 | *5/16*	20 | *3/4*	67	64	D	1	5,000	5	**478.200.08**	**478.300.08**	*478.500.08*
300 | *12*	10 | *3/8*	20 | *3/4*	67	64	D	1	5,000	5	**478.200.10**	*478.300.10*	
300 | *12*	6 | *1/4*	25.4 | *1*	67	64	D	1	5,000	5	*478.225.06*	*478.325.06*	
300 | *12*	8 | *5/16*	25.4 | *1*	67	64	D	1	5,000	5	*478.225.08*	*478.325.08*	
300 | *12*	10 | *3/8*	25.4 | *1*	67	64	D	1	5,000	5	*478.225.10*	*478.325.10*	

ZF = Knot type
Z = number of knots, R = number of rows

Knot Wheel Brushes, multiple rows

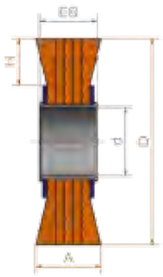

ZF = Knot type
Z = number of knots, R = number of rows

Joint Cleaning Brushes
Joint cleaning brushes are used for the production of expansion joints in the construction of new linings as well as in restoration and reparation. The application of this knot wheel brush is usually alike with all pavements.

Brushes with brass coated steel wire STM are very stable, hence they are often used for cleaning concrete joints.

Item Nos. in bold are available ex stock.
Consider our minimum order value for *italic printed* article numbers (see page 164).

STA = steel wire, straight
STH = steel wire, high tensile, straight
STM = brass coated steel, straight
ROH = stainless steel wire, high tensile, straight

Pipeline Brushes / Stringer Bead Brushes

Pipeline-Brushes / Stringer Bead Brushes
LESSMANN-Pipelinebrushes are specially developed for professional use on U- and V-welds in the pipeline industry.

The remarkable features of the high quality LESSMANN Pipeline Brushes are the long lifetime and the quietness of running. They are especially narrow and therefore they are the perfect tool for cleaning all welds at tube connections.

Pipeline Brushes / Stringer Bead Brushes, left-right knotted
Left-right knotted pipeline brushes usually are more aggressive, hence they are often used for heavy brushing operations.
Besides the knots open less, therefore there are ideal for the treatment of edges.

Stainless Steel Brushes
LESSMANN Pipeline Brushes with stainless steel wire have green side plates. We use wire with material number 1.4310. Material number 1.4401 can be used on request.
Information on working on stainless steel you find at www.lessmann.com

ZF = Knot type
Z = number of knots

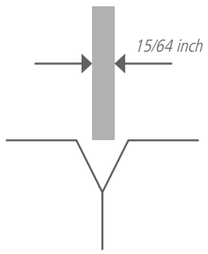

Item Nos. in bold are available ex stock.
Consider our minimum order value for *italic printed* article numbers (see page 164).

STH = steel wire, high tensile, straight

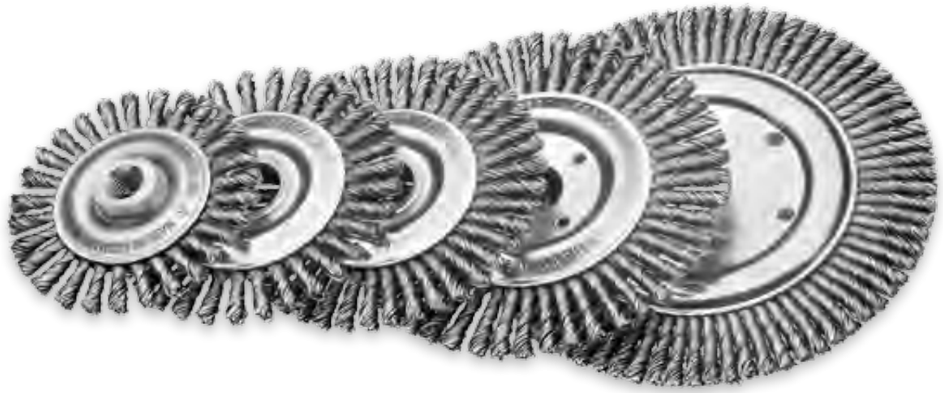

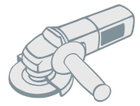

Pipeline-Brushes / Stringer Bead Brushes, Steel Wire							Bo. 22.2 | *7/8"*	M 14 x 2.0	5/8" - 11 UNC
D	A	H	Z	ZF	RPM	Pack.*	**STH 0.50** | *0.020"*	**STH 0.50** | *0.020"*	**STH 0.50** | *0.020"*
mm | *inch*	mm | *inch*				max.		Art.-No.	Art.-No.	Art.-No.
100 | *4*	6 | *1/4*	19	28	D	20,000	10	available on demand	**471.207.28**	*471.208.28*
115 | *4 1/2*	6 | *1/4*	22	32	D	15,000	1	**472.201.EZ**		
115 | *4 1/2*	6 | *1/4*	22	32	D	15,000	5/10	**472.201.32**	*472.207.32*	*472.208.32*
115 | *4 1/2*	6 | *1/4*	22	39	D	15,000	10	**472.201.39**	available on demand	available on demand
125 | *5*	6 | *1/4*	26	40	D	15,000	1	**473.201.EZ**		
125 | *5*	6 | *1/4*	26	40	D	15,000	5/10	**473.201.40**	**473.207.40**	*473.208.40*
150 | *6*	6 | *1/4*	30	48	D	12,500	5/10	**474.201.48**	*474.207.48*	*474.208.48*
178 | *7*	6 | *1/4*	36	48	D	12,500	1	**475.201.EZ**		
178 | *7*	6 | *1/4*	36	48	D	12,500	5/10	**475.201.48**	*475.207.48*	*475.208.48*
178 | *7*	6 | *1/4*	30	56	D	12,500	5/10	**475.201.56**	*475.207.56*	*475.208.56*
178 | *7*	6 | *1/4*	30	76	D	12,500	5/10	**475.201.76**	*475.207.76*	*475.208.76*
230 | *9 1/16*	6 | *1/4*	56	76	D	12,500	1	*475.201.76*		

* Brushes with thread = packed 5 pieces per carton, brushes with bore = packed 10 pieces per carton

Pipeline Brushes / Stringer Bead Brushes

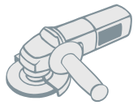

Pipeline-Brushes / Stringer Bead Brushes, Stainless Steel							Bo. 22.2 | *7/8"*	M 14 x 2.0	5/8" - 11 UNC
D mm | *inch*	A mm | *inch*	H	Z	ZF	RPM max.	Pack.*	**ROH 0.50** | *0.020"* Art.-No.	**ROH 0.50** | *0.020"* Art.-No.	**ROH 0.50** | *0.020"* Art.-No.
100 | *4*	6 | *1/4*	19	28	D	20,000	10	available on demand	**471.807.28**	*471.808.28*
115 | *4 1/2*	6 | *1/4*	22	32	D	15,000	1	**472.801.EZ**		
115 | *4 1/2*	6 | *1/4*	22	32	D	15,000	5/10*	**472.801.32**	*472.807.32*	*472.808.32*
115 | *4 1/2*	6 | *1/4*	22	39	D	15,000	10	**472.801.39**	available on demand	available on demand
125 | *5*	6 | *1/4*	26	40	D	15,000	1	**473.801.EZ**		
125 | *5*	6 | *1/4*	26	40	D	15,000	5/10*	**473.801.40**	**473.807.40**	*473.808.40*
150 | *6*	6 | *1/4*	30	48	D	12,500	5/10*	**474.801.48**	*474.807.48*	*474.808.48*
178 | *7*	6 | *1/4*	36	48	D	12,500	5/10*	**475.801.48**	*475.807.48*	*475.808.48*
178 | *7*	6 | *1/4*	30	56	D	12,500	5/10*	*475.801.56*	*475.807.56*	*475.808.56*
178 | *7*	6 | *1/4*	30	76	D	12,500	5/10*	*475.801.76*	*475.807.76*	*475.808.76*

* Brushes with thread = packed 5 pieces per carton, brushes with bore = packed 10 pieces per carton

1 2 3

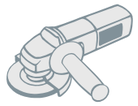

1 Pipeline-Brushes / Stringer Bead Brushes, rose bud								
D mm | *inch*	A mm | *inch*	d mm | *inch*	H	Z	ZF	RPM max.	Pack.	**STH 0.50** | *0.020"* Art.-No.
178 | *7*	6 | *1/4*	22.2 | *7/8*	28	76	B	12,500	10	**475.2B1.76**

2 Pipeline-Brushes / Stringer Bead Brushes, left-right knotted								
D mm | *inch*	A mm | *inch*	d mm | *inch*	H	Z	ZF	RPM max.	Pack.	**STH 0.50** | *0.020"* Art.-No.
178 | *7*	6 | *1/4*	22.2 | *7/8*	28	76	D	12,500	10	*475.2W1.76*

3 Pipeline-Brushes / Stringer Bead Brushes, encapsulated								
D mm | *inch*	A mm | *inch*	d mm | *inch*	H			RPM max.	Pack.	**STM 0.35** | *0.014"* Art.-No.
150 | *6*	6 | *1/4*	22.2 | *7/8*	29			9,000	1	*300.771.KG*
178 | *7*	6 | *1/4*	22.2 | *7/8*	43			9,000	1	*351.771.KG*

Pipeline Brushes / Stringer Bead Brushes with rose bud
Knotted brushes with rose bud have a longer life time. They are used for a professional treatment of weld seams in the tube and pipeline construction.

Pipeline Brushes / Stringer Bead Brushes, left-right knotted
Left-right knotted pipeline brushes usually are more aggressive, hence they are often used for heavy brushing operations.
Besides the knots open less, therefore they are ideal for the treatment of edges.

Pipeline Brushes / Stringer Bead Brushes, encapsulated
With encapsulated pipeline brushes a very exact and precise working is possible. By embedding in tough plastic the filling width always remains the same and early break of the wires can be prevented.
A working width of 6 mm still allows to reach U- and V- weld seams.

Item Nos. in bold are available ex stock.
Consider our minimum order value for *italic printed* article numbers (see page 164).

STH = steel wire, high tensile, straight
STM = brass coated steel, crimped
ROH = stainless steel wire, high tensile, straight

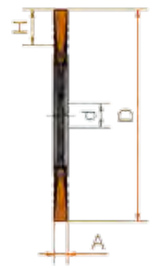

ZF = Knot type
Z = number of knots

Cutback Brushes

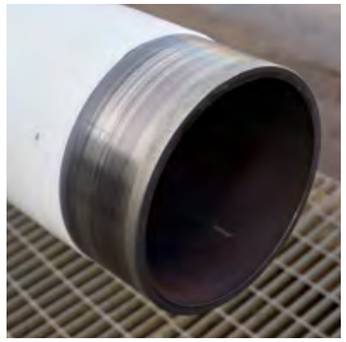

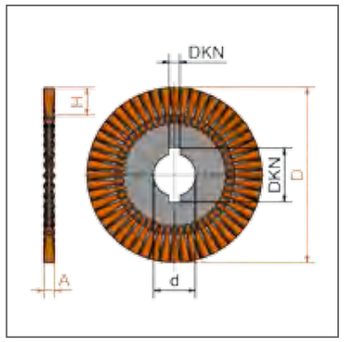

Cutback Brushes
for the removal of pipe coatings.

The removal of pipe-ends with brushes is a common process in the pipe industry.

To prevent corrosion, steel pipes are usually covered in epoxy resin and several layers of polyethylene (PE) or polypropylene (PE). To ensure a strong and safe welded joint during the installation of the pipes, the coating has to be removed completely on the ends of the pipes. For this process, usually several rings of knotted wire brushes are mounted together to get one large block of wheel brushes.

The LESSMANN Cutback Brushes are proven to have a long lifetime and are used by many international companies producing pipe for the oil and gas industry.

LESSMANN Cutback rings **are supplied already mounted to one another**. This ensures a perfect balancing, an even surface and a tighter fitting.

All Cutback Brushes can be purchased with left-right knotting (WZ), too.

Cutback Brushes, left-right knotted
Left-right knotted cutback brushes usually are more aggressive, hence they are often used for heavy brushing operations.
The knots of this type of brush open less, therefore there are ideal for the treatment of edges.

Item Nos. in bold are available ex stock.
Consider our minimum order value for *italic printed* article numbers (see page 164).

STH = steel wire, high tensile, straight
ROH = stainless steel wire, high tensile, straight

Knot types ZF

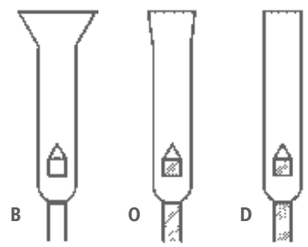

B: Rose Bud
O: Open Knot
(wire ends are cut)
D: Fully knotted
(wire ends are cut completely)

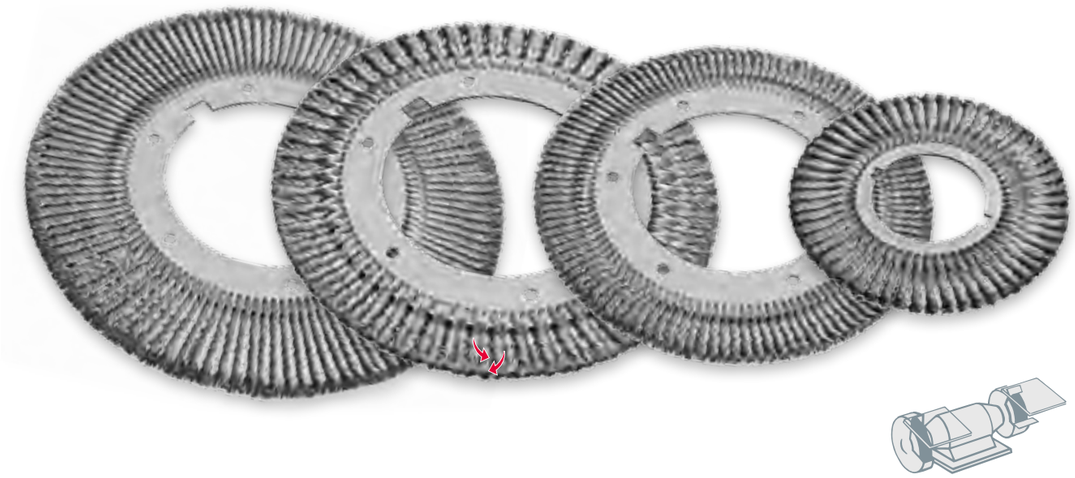

Cutback Brushes

D	A	H	d	Keyways	Z	ZF		STH	ROH
mm | *inch*	mm | *inch*	mm | *inch*	mm | *inch*						
250 | *10*	13 | *33/64*	45 | *1 49/64*	102 | *4 1/64*	115.8 x 13	56	O		0.63	0.50 / 0.80
300 | *12*	13 | *33/64*	60 | *12 23/64*	102 | *4 1/64*	115.8 x 13	64	O		0.80	0.50 / 0.80
390 | *15 23/64*	13 | *33/64*	45 | *1 49/64*	200.6 | *7 57/64*	233 x 24	114	O	right-left knotted (WZ)	0.63 / 0.80	0.80
465 | *18 5/16*	13 | *33/64*	82.5 | *3 1/4*	200.6 | *7 57/64*	233 x 24	114	O		0.58 / 0.80	0.80

The table above gives you an insight into the range of brushes LESSMANN can produce.
Due to modern technologies in production we can respond to individual requests and wishes of our customers (diameter, working width, bore).

If requested, scribe markings are possible.

Please follow the QR-Code or fill in the form below:

Enquiry for Cutback Brushes

sender: company, contact person

Please fill in

Piece number: _____
D diameter _____ mm
A working width _____ mm
H trim height _____ mm
d bore _____ mm
Keyways _____ mm
Z number of knots _____
ZF knot type _____
filling material _____
wire diameter _____ mm

Inquiries and Infos:
Phone: +49 9082 707-0 info@lessmann.com
Fax: +49 9082 707-76 www.lessmann.com

Single Segment Brushes

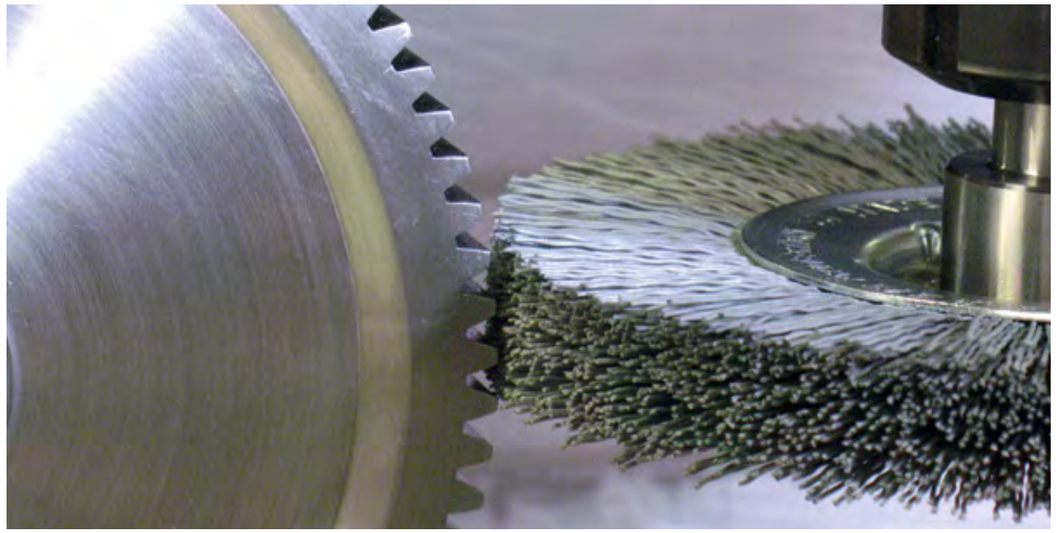

Single Segment Brushes
These brushes are mainly used for deburring purposes in stationary machines or processing centres.
The construction of these brushes allows it to assemble them to roller brushes of any desired width. Many different filling materials like steel, stainless steel or abrasive nylon with various grit are at your disposal.

Outstanding Processing
The flexible bristles align to the different shapes of working pieces.
An important advantage of the single segment brushes compared to other grinding tools, such as pads or grinding discs, is their gentle treatment.
Furthermore the brushes do not become encrusted. They are suitable for deburring work and fine polishing of stainless steel, light metal or plastic material. Besides the executions listed on this page other diameters and grit sizes are available.

Stainless Steel Brushes
LESSMANN-brushes with stainless steel wire have a laser imprint.
Information on working on stainless steel you find at www.lessmann.com

Laser imprint of brushes

„A" can be up to 4 mm larger than **„BD"**
EB 3.0 mm with R > 60
EB 2.4 mm with R ≤ 60

For further information on abrasive filaments please see page 13.
Item Nos. in bold are available ex stock.
Consider our minimum order value for *italic printed* article numbers (see page 164).

SIC = silicon carbide bristles

1

2

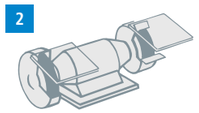

1 Single Segment Wheel Brushes, Silicon Carbide Bristles

D mm | *inch*	R	BD	H	d Stand. mm | *inch*	d min./max.	RPM max.	Pack.	SIC 80/1.2 Art.-No.	SIC 120/1.1 Art.-No.	SIC 120/0.6 Art.-No.	SIC 180/1.0 Art.-No.	SIC 320/0.6 Art.-No.
80 | *3 1/4*	26	12	17	12 | *1/2*	12-16	12,000	5		*310.831*	**310.841**	**310.851**	**310.871**
100 | *2*	30	12	21	12 | *1/2*	12-20	8,000	5	**320.821**	*320.831*	**320.841**	**320.851**	**320.871**
125 | *5*	30	12	33	12 | *1/2*	12-20	8,000	5	*330.821*		**330.841**	**330.851**	*330.871*
150 | *6*	50	14	32	12 | *1/2*	12-30	6,000	5	**340.821**	**340.831**	**340.841**	**340.851**	**340.871**
178 | *7*	50	14	46	12 | *1/2*	12-30	6,000	5	*350.821*	**350.831**	**350.841**	*350.851*	*350.871*
178 | *7*	60	16	41	12 | *1/2*	12-40	6,000	5			*351.841*	*351.851*	*351.871*
200 | *8*	60	16	52	12 | *1/2*	12-40	6,000	5	*361.821*	*361.831*	*361.841*	*361.851*	*361.871*
200 | *8*	80	16	43	16 | *5/8*	16-60	6,000	5		*362.831*	*362.841*	**362.851**	*362.871*
200 | *8*	100	16	32	16 | *5/8*	16-80	6,000	5		**360.831**	**360.841**	**360.851**	**360.871**
250 | *10*	100	16	57	16 | *5/8*	16-80	6,000	5		**370.831**	*370.841*	**370.851**	**370.871**
250 | *10*	120	16	45	20 | *3/4*	20-100	3,600	5			*371.841*	*371.851*	*371.871*
250 | *10*	150	19	30	25.4 | *1*	25.4-130	3,600	5		*372.831*	*372.841*	**372.851**	*372.871*
300 | *12*	120	16	70	20 | *3/4*	20-100	3,600	5			*380.841*	*380.851*	*380.871*
300 | *12*	150	19	35	25.4 | *1*	25.4-130	3,600	5		*381.831*	*381.841*	*381.851*	*381.871*
300 | *12*	200	19	30	*25.4* | *1*	25.4-170	2,600	5			*38T.841*	*38T.851*	

2 Single Segment Wheel Brushes, Silicon Carbide Bristles, 2 rows

D mm | *inch*	R	BD	H	d Stand. mm | *inch*	d min./max.	RPM max.	Pack.	SIC 120/0.6 Art.-No.	SIC 180/1.0 Art.-No.	SIC 320/0.6 Art.-No.
200 | *8*	80	27	43	16 | *5/8*	16-60	6,000	5	available on demand	*362.852*	available on demand
250 | *10*	100	27	58	16 | *5/8*	16-80	6,000	5	available on demand	*370.852*	available on demand

Bore must be indicated in the order. Standard bore delivery ex stock, short termed. Other bores are available with extra charge: 1 - 10 pcs. EUR 5.50 / 11 - 25 pcs. EUR 3.50

Single Segment Brushes

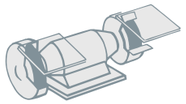

Single Segment Wheel Brushes, Steel Wire

D mm | *inch*	R	BD	H	d Stand. mm | *inch*	d min./max.	RPM max.	Pack.	1 STA 0.20 | *0.008"* Art.-No.	1 STA 0.30 | *0.012"* Art.-No.	2 STL 0.35 | *0.014"* Art.-No.
80 | *3 1/4*	26	12	17	12 | *1/2*	12-16	12,000	5	**310.141**	**310.161**	available on demand
100 | *4*	30	12	21	12 | *1/2*	12-20	8,000	5	**320.141**	**320.161**	*320.707*
125 | *5*	30	12	33	12 | *1/2*	12-20	8,000	5	*330.141*	**330.161**	available on demand
125 | *5*	40	12	29	12 | *1/2*	12-25	8,000	5	available on demand	*331.161*	available on demand
150 | *6*	50	14	32	12 | *1/2*	12-30	6,000	5	**340.141**	**340.161**	*340.707*
178 | *7*	50	14	46	12 | *1/2*	12-30	6,000	5	*350.141*	**350.161**	available on demand
178 | *7*	60	16	41	12 | *1/2*	12-40	6,000	5	*351.141*	*351.161*	*351.707*
200 | *8*	60	16	52	12 | *1/2*	12-40	6,000	5	*361.141*	*361.161*	available on demand
200 | *8*	80	16	43	16 | *5/8*	16-60	6,000	5	*362.141*	*362.161*	*362.707*
200 | *8*	100	16	32	16 | *5/8*	16-80	6,000	5	**360.141**	**360.161**	*360.707*
250 | *10*	100	16	57	16 | *5/8*	16-80	6,000	5	*370.141*	**370.161**	available on demand
250 | *10*	120	16	45	20 | *3/4*	20-100	3,600	5	*371.141*	*371.161*	available on demand
300 | *12*	120	16	70	20 | *3/4*	20-100	3,600	5	*380.141*	*380.161*	available on demand
300 | *12*	150	19	55	25.4 | *1*	25.4-130	3,600	5		*381.161*	

Single Segment Wheel Brushes, Steel Wire, 2 rows

D mm | *inch*	R	BD	H	d Stand. mm | *inch*	d min./max.	RPM max.	Pack.	STH 0.35 | *0.014"* Art.-No.
200 | *8*	80	20	43	16 | *5/8*	16-60	6,000	5	*362.272*
250 | *10*	100	20	58	16 | *5/8*	16-80	6,000	5	*370.272*

Bore must be indicated in the order. Standard bore delivery ex stock, short termed. Other bores are available with extra charge: 1 - 10 pcs. EUR 5,50 / 11 - 25 pcs. EUR 3,50

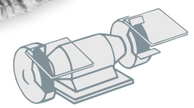

Single Segment Wheel Brushes, Stainless Steel Wire

D mm | *inch*	R	BD	H	d Stand. mm | *inch*	d min./max.	RPM max.	Pack.	ROF 0.20 | *0.008"* Art.-No.	ROF 0.30 | *0.012"* Art.-No.
80 | *3 1/4*	26	12	17	12 | *1/2*	12-16	12,000	5	*310.341*	*310.361*
100 | *2*	30	12	21	12 | *1/2*	12-20	8,000	5	**320.341**	**320.361**
125 | *5*	30	12	33	12 | *1/2*	12-20	8,000	5	**330.341**	**330.361**
125 | *5*	40	12	29	12 | *1/2*	12-25	8,000	5	*331.341*	*331.361*
150 | *6*	50	14	32	12 | *1/2*	12-30	6,000	5	**340.341**	**340.361**
178 | *7*	50	14	46	12 | *1/2*	12-30	6,000	5	*350.341*	**350.361**
178 | *7*	60	16	41	12 | *1/2*	12-40	6,000	5	*351.341*	*351.361*
200 | *8*	60	16	52	12 | *1/2*	12-40	6,000	5	*361.341*	*361.361*
200 | *8*	80	16	43	16 | *5/8*	16-60	6,000	5	*362.341*	*362.361*
200 | *8*	100	16	32	16 | *5/8*	16-80	6,000	5	*360.341*	**360.361**
250 | *10*	100	16	57	16 | *5/8*	16-80	6,000	5	*370.341*	*370.361*
250 | *10*	120	16	45	20 | *3/4*	20-100	6,000	5	*371.341*	*371.361*
300 | *12*	120	16	70	20 | *3/4*	20-100	3,600	5	*380.341*	*380.361*
300 | *12*	150	19	55	25.4 | *1*	25.4-130	3,600	5		*381.361*

Bore must be indicated in the order. Standard bore delivery ex stock, short termed. Other bores are available with extra charge: 1 - 10 pcs. EUR 5.50 / 11 - 25 pcs. EUR 3.50

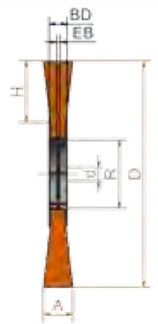

„A" can be up to 4 mm larger than **„BD"**
EB 3,0 mm with R > 60
EB 2,4 mm with R ≤ 60

For further information on abrasive filaments please see page 13.
Item Nos. in bold are available ex stock.
Consider our minimum order value for *italic printed* article numbers (see page 164).

STA = steel wire, crimped
STH = steel wire, high tensile, crimped
STL = cord wire, crimped
ROF = stainless steel wire, crimped

Wheel Brushes

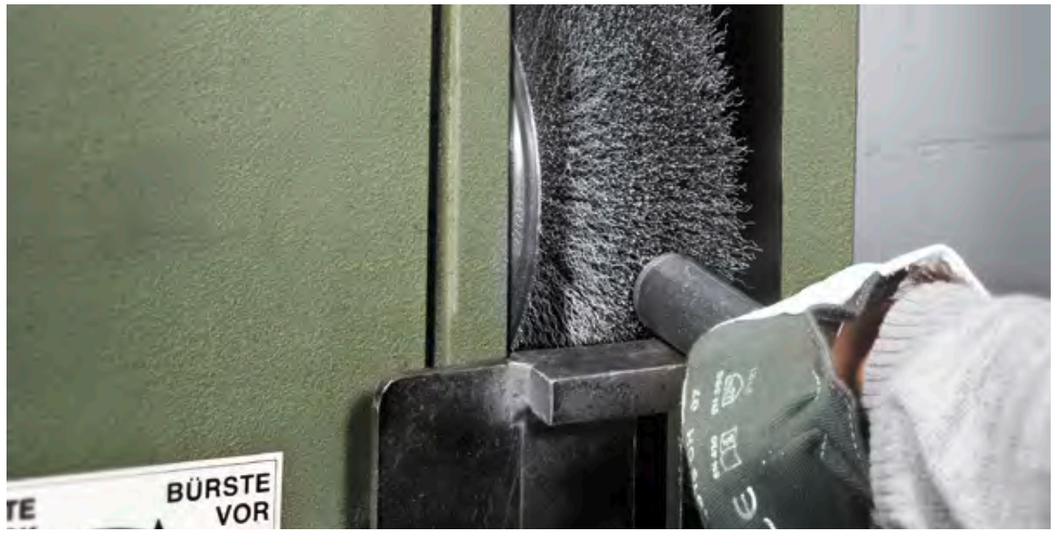

Wheel Brushes
Wheel brushes filled with crimped wire are used for the purpose of obtaining different surface finishing:
- the removal of rust, paint and dirt
- for roughening, deburring, stripping or polishing.

Big or Small?
A decisive factor for choosing the most suitable brush is the wire and tube diameter. Brushes with a larger tube diameter (measure R) are filled with more wire, are more aggressive and have a longer life.
In our catalogue are the usual tube diameters – other diameters can also be supplied.
More technical instruction such as peripheral speed etc. see pages 8 - 10.

The bore must be indicated in the order. Without any instruction delivery will be with standard bore "d Stand".

Stainless Steel Brushes
Information on working on stainless steel you find at www.lessmann.com

Other filling materials, filling diameters and special executions
Take advantage of the LESSMANN range of products, of the experience in developing and producing brushes! We are able to produce special executions on demand.

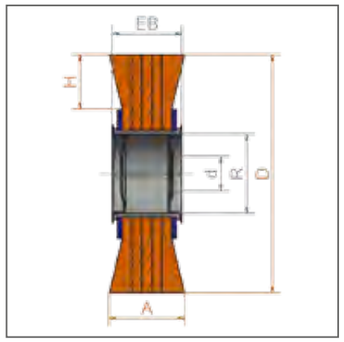

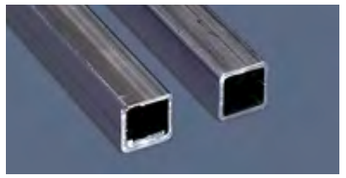

Plate with tube 80 and 100 (Set 4 / 5)

Adapter Set
All brushes are supplied with adapter sets for easy mounting on all popular grinding machines. The adapters have the following dimensions:

Set 1 / tube 30:
30 / 1" / 22.2 / 20 / 16 / 1/2" / 12
Set 2 / tube 40:
40 / 32 / 1" / 22.2 / 20 / 16 / 1/2"
Set 3 / tube 50:
50 / 32 / 1" / 22.2 / 20 / 16 / 1/2"
Set 4 / tube 80 + 100:
brushes with metal discs, bore 50.8 and double keyway 7x13; plus adapter to bore 30.
Set 5 / tube 80 + 100:
brushes with metal discs, bore 50.8 and double keyway 7x13; plus adapter to bore 32.

By usage without adapter set the actual size might be up to 0.2 mm below nominal size.

Item Nos. in bold are available ex stock.
Consider our minimum order value for *italic printed* article numbers (see page 164).

STA = steel wire, crimped
STM = brass coated steel, crimped

You can find our **tutorials** here:
www.lessmann.com/index.php/en/content/view/full/711

EAN **Wheel Brushes, Steel Wire**

D mm | *inch*	A	EB	R	H	d Stand. mm | *inch*	d min./max.	RPM max.	Pack.	1 STA 0.15 | *0.006"* Art.-No.	1 STA 0.20 | *0.008"* Art.-No.	1 STA 0.30 / *0.35 *0.012" / 0.014"*	2 STM 0.30 | *0.012"* Art.-No.
80 | *3 1/4*	18-20	18	20	20	10 | *3/8*	10-20	10,000	1	available on demand	**312.142**	**312.162**	
80 | *3 1/4*	25-27	24	20	20	10 | *3/8*	10-20	10,000	1	available on demand	*312.143*	**312.163**	
100 | *4*	20-22	19	30	23	Set 1	10-30	8,000	1	*323.132*	**323.142**	**323.162**	
100 | *4*	28-30	25	30	23	Set 1	10-30	8,000	1	*323.133*	**323.143**	**323.163**	
125 | *5*	21-23	20	40	27	Set 2	13-40	6,000	1	*334.132*	**334.142**	**334.162**	
125 | *5*	29-31	26	40	27	Set 2	13-40	6,000	1	available on demand	*334.143*	**334.163**	
150 | *6*	22-24	20	40	33	Set 2	13-40	6,000	1	*344.132*	**344.142**	**344.172***	
150 | *6*	30-34	26	40	33	Set 2	13-40	6,000	1	*344.133*	**344.143**	**344.173***	
150 | *6*	23-25	22	50	33	Set 3	13-50	6,000	1	*345.132*	**345.142**	**345.162**	*345.762*
150 | *6*	30-34	30	50	33	Set 3	13-50	6,000	1	*345.133*	**345.143**	**345.163**	
178 | *7*	23-26	22	50	37	Set 3	16-50	6,000	1	available on demand	**355.142**	**355.162**	*355.762*
178 | *7*	32-35	30	50	37	Set 3	16-50	6,000	1	*355.133*	**355.143**	**355.163**	
200 | *8*	24-27	22	50	48	Set 3	16-50	6,000	1	*365.132*	**365.142**	**365.172***	
200 | *8*	35-38	30	50	48	Set 3	16-50	6,000	1	*365.133*	**365.143**	**365.173***	*365.763*
200 | *8*	28-32	29	80	38	Set 4+1	16-80	4,500	1	available on demand	**366.142**	**366.162**	*366.762*
200 | *8*	40-45	39	80	38	Set 4+1	16-80	4,500	1	available on demand	*366.143*	**366.163**	
250 | *10*	30-35	29	80	50	Set 4+1	20-80	3,600	1	available on demand	**376.142**	**376.162**	
250 | *10*	42-45	39	80	50	Set 4+1	20-80	3,600	1	available on demand	available on demand	**376.163**	
250 | *10*	32-37	30	100	50	Set 4+1	20-100	3,600	1	available on demand	**377.142**	**377.162**	*377.762*
250 | *10*	43-48	39	100	50	Set 4+1	20-100	3,600	1	available on demand	*377.143*	**377.163**	
250 | *10*	55-60	49	100	50	Set 4+1	20-100	3,600	1	available on demand	*377.144*	**377.164**	
300 | *12*	35-40	30	100	60	Set 4	30-100	3,000	1	available on demand	**387.142**	**387.162**	
300 | *12*	47-52	39	100	60	Set 4	30-100	3,000	1	available on demand	*387.143*	**387.163**	
300 | *12*	30-35	34	120	50	Set 4	32-100	3,000	1			**388.172***	
300 | *12*	42-47	46	120	50	Set 4	32-100	3,000	1			**388.173***	
350 | *14*	35-40	30	100	85	Set 5	32-100	2,400	1	available on demand	*397.142*	**397.172***	
350 | *14*	55-60	39	100	85	Set 5	32-100	2,400	1	available on demand	*397.143*	**397.173***	

Bore must be indicated in the order. Standard bore delivery ex stock, short termed. Other bores are available with extra charge: 1 - 10 pcs. EUR 5.50 / 11 - 25 pcs. EUR 3.50

Wheel Brushes

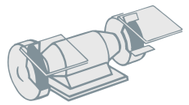

Wheel Brushes, Stainless Steel

D mm | *inch*	A	EB	R	H	d Stand. mm | *inch*	d min./max.	RPM max.	Pack.	**ROF 0.20** | *0.008"* Art.-No.	**ROF 0.30** | *0.012"* Art.-No.	**SIC 80/1.2** Art.-No.	**SIC 180/1.0** Art.-No.
80 | *3 1/4*	18-20	18	20	20	10 | *3/8*	10-20	10,000	1	*312.342*	**312.362**		
80 | *3 1/4*	25-27	24	20	20	10 | *3/8*	10-20	10,000	1	available on demand	*312.363*		
100 | *4*	20-22	19	30	23	Set 1	10-30	8,000	1	*323.342*	**323.362**		
100 | *4*	28-30	25	30	23	Set 1	10-30	8,000	1	*323.343*	**323.363**		
125 | *5*	21-23	20	40	27	Set 2	13-40	6,000	1	*334.342*	**334.362**		
125 | *5*	29-31	26	40	27	Set 2	13-40	6,000	1	*334.343*	**334.363**		
150 | *6*	22-24	20	40	33	Set 2	13-40	6,000	1	*344.342*	**344.362**		
150 | *6*	30-34	26	40	33	Set 2	13-40	6,000	1	**344.343**	**344.363**		
150 | *6*	18-20	20	50	33	Set 3	13-50	6,000	1			**345.822**	**345.852**
150 | *6*	23-25	22	50	33	Set 3	13-50	6,000	1	*345.342*	**345.362**		
150 | *6*	30-34	30	50	33	Set 3	13-50	6,000	1	*345.343*	**345.363**		
178 | *7*	23-26	22	50	37	Set 3	16-50	6,000	1	**355.342**	**355.362**		
178 | *7*	32-35	30	50	37	Set 3	16-50	6,000	1	available on demand	**355.363**		
200 | *8*	24-27	22	50	48	Set 3	16-50	6,000	1	**365.342**	**365.362**		
200 | *8*	35-38	30	50	48	Set 3	16-50	6,000	1	*365.343*	**365.363**		
200 | *8*	28-32	29	80	38	Set 4+1	16-80	4,500	1	*366.342*	**366.362**		
200 | *8*	40-45	39	80	38	Set 4+1	16-80	4,500	1	*366.343*	**366.363**		
250 | *10*	30-35	29	80	50	Set 4+1	20-80	3,600	1	*376.342*	**376.362**		
250 | *10*	42-45	39	80	50	Set 4+1	20-80	3,600	1	*376.343*	**376.363**		
250 | *10*	32-37	30	100	50	Set 4+1	20-100	3,600	1	*377.342*	**377.362**		
250 | *10*	43-48	39	100	50	Set 4+1	20-100	3,600	1	*377.343*	**377.363**		
300 | *12*	35-40	30	100	60	Set 4	30-100	3,000	1	*387.342*	**387.362**		
300 | *12*	47-52	39	100	60	Set 4	30-100	3,000	1	*387.343*	*387.363*		
350 | *14*	35-40	30	100	85	Set 5	32-100	2,400	1	available on demand	*397.362*		

Bore must be indicated in the order. Standard bore delivery ex stock, short termed. Other bores are available with extra charge: 1 - 10 pcs. EUR 5.50 / 11 - 25 pcs. EUR 3.50

Plate with tube 80 and 100 (Set 4 / 5)

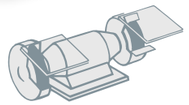

Wheel Brushes, Brass Wire

D mm | *inch*	A	EB	R	H	d Stand. mm | *inch*	d min./max.	RPM max.	Pack.	**MES 0.20** | *0.008"* Art.-No.	**MES 0.30** | *0.012"* Art.-No.	**BRO 0.30** Art.-No.
80 | *3 1/4*	18-20	18	20	20	10 | *3/8*	10-20	10,000	1	**312.542**	*312.562*	
80 | *3 1/4*	25-27	24	20	20	10 | *3/8*	10-20	10,000	1	*312.543*	*312.563*	
100 | *4*	20-22	19	30	23	Set 1	10-30	8,000	1	**323.542**	*323.562*	
100 | *4*	28-30	25	30	23	Set 1	10-30	8,000	1	*323.543*	*323.563*	
125 | *5*	21-23	20	40	27	Set 2	13-40	6,000	1	**334.542**	*334.562*	
125 | *5*	29-31	26	40	27	Set 2	13-40	6,000	1	*334.543*	available on demand	
150 | *6*	22-24	20	40	33	Set 2	13-40	6,000	1	**344.542**	**344.562**	**344.662**
150 | *6*	30-32	26	40	33	Set 2	13-40	6,000	1	*344.543*	**344.563**	
150 | *6*	23-25	22	50	33	Set 3	13-50	6,000	1	**345.542**	**345.562**	*345.662.MS**
150 | *6*	30-34	30	50	33	Set 3	13-50	6,000	1	*345.543*	**345.563**	
178 | *7*	23-26	22	50	37	Set 3	16-50	6,000	1	*355.542*	**355.562**	
178 | *7*	32-35	30	50	37	Set 3	16-50	6,000	1	*355.543*	**355.563**	
200 | *8*	24-27	22	50	48	Set 3	16-50	6,000	1	**365.542**	**365.562**	
200 | *8*	35-38	30	50	48	Set 3	16-50	6,000	1	*365.543*	**365.563**	
200 | *8*	28-32	29	80	38	Set 4+1	16-80	4,500	1	**366.542**	**366.562**	
200 | *8*	40-45	39	80	38	Set 4+1	16-80	4,500	1	*366.543*	*366.563*	
250 | *10*	30-35	29	80	50	Set 4+1	20-80	3,600	1	*376.542*	*376.562*	
250 | *10*	42-45	39	80	50	Set 4+1	20-80	3,600	1	*376.543*	available on demand	
250 | *10*	32-37	30	100	50	Set 4+1	20-100	3,600	1	available on demand	**377.562**	
250 | *10*	43-48	39	100	50	Set 4+1	20-100	3,600	1	available on demand	available on demand	
300 | *12*	35-40	30	100	60	Set 4	30-100	3,000	1	available on demand	**387.562**	
300 | *12*	47-52	39	100	60	Set 4	30-100	3,000	1	available on demand	available on demand	
350 | *14*	35-40	30	100	85	Set 5	32-100	2,400	1	available on demand	*397.562*	

Bore must be indicated in the order. Standard bore delivery ex stock, short termed. Other bores are available with extra charge: 1 - 10 pcs. EUR 5.50 / 11 - 25 pcs. EUR 3.50
* Bronze Wire, fittings brass (low-sparkling)

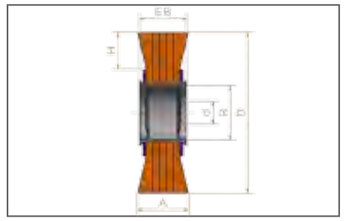

Item Nos. in bold are available ex stock.
Consider our minimum order value for *italic printed* article numbers (see page 164).

ROF = stainless steel wire, crimped

MES = brass wire, crimped

Brushes for the wood machining industry

Satinising Brushes
Satinising brushes are the perfect tool for satining, polishing, abrading/smoothing, matting and structuring.

Staple Set Wheel and Disc Brushes
Wheel and Disc Brushes with abrasive nylon filament are used fort he wood machining industry. Used on angle grinders, the disc brushes are ideal for maintaining, cleaning, strucutring or polishing wood.
Besides the brushes are used for giving wood a rustic effect or for roughening it before treating with colour or lacquer.
The brushes are very effective when working on large surfaces.

Item Nos. in bold are available ex stock.
Consider our minimum order value for *italic printed* article numbers (see page 164).

STM	= brass coated steel, crimped
STL	= cord wire, crimped
ROF	= stainless steel wire, crimped
SIC	= silicon carbide bristles
FIB	= fibre
PA	= polyamide, crimped

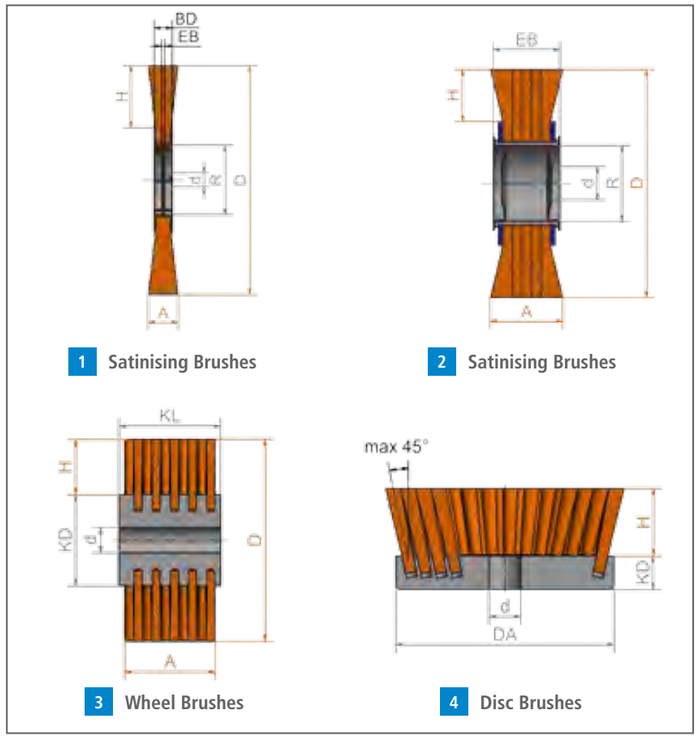

1 Satinising Brushes
2 Satinising Brushes
3 Wheel Brushes
4 Disc Brushes

WHEEL BRUSHES

EAN

Satinising Brushes

	D mm | *inch*	A mm | *inch*	EB mm | *inch*	R mm | *inch*	H	d mm | *inch*	RPM max.	Pack.	ROF 0.20 | *0.008"* Art.-No.	SIC 80/1.2 Art.-No.	STL 0.25 | *0.010"* Art.-No.	FIB/PA 0.4 | *0.016"* Art.-No.
1	100 | *4*	12 | *1/2*	12 | *1/2*	30 | *1 1/4*	21	19.2 | *3/4*	8,000	5	*320.341.19*	*320.821.19*	*320.703.19*	
2	100 | *4*	70 | *2 3/4*	70 | *2 3/4*	30 | *1 1/4*	23	19.2 | *3/4*	8,000	1	**323.348.19**	**323.828.19**	**323.704.19**	
	100 | *4*	100 | *4*	102 | *4*	30 | *1 1/4*	23	19.2 | *3/4*	8,000	1	*323.305.19*	*323.805.19*	*323.705.19*	**323.900.10**

	D mm | *inch*	A mm | *inch*	EB mm | *inch*	R mm | *inch*	H	d mm | *inch*	RPM max.	Pack.	STM 0.35 | *0.014"* Art.-No.	SIC 80/1.2 Art.-No.	SIC K 120/1.1 Art.-No.
2	100 | *4*	120 | *4 3/4*	122 | *4 3/4*	30 | *1 1/4*	23	12.7 | *1/2*	8,000	1	*323.770.13*	*323.820.13*	*323.830.13*

Bore must be indicated in the order. Standard bore with double keyway 5,2 x 23 mm delivery ex stock, short termed.
Other bores are available with extra charge: 1 - 10 pcs. EUR 5,50 / 11 - 25 pcs. EUR 3,50

3 Staple Set Wheel Brushes

D mm | *inch*	KL mm | *inch*	A mm | *inch*	d	KD	RPM max.	Pack.	SIC 46/1.6 Art.-No.	SIC 60/1.5 Art.-No.	SIC 80/1.2 Art.-No.	SIC 120/1.10 Art.-No.	STM 0.30 Art.-No.
140 | *5 1/2*	58 | *2 9/32*	40 | *1 5/8*	M 14	80	2,500	1	*402.881*	*402.882*	**402.880**	*402.883*	**402.780**
140 | *5 1/2*	90 | *3 1/23*	75 | *3*	M 14	80	2,500	1	*402.891*	*402.892*	**402.890**	*402.893*	

4 Staple Set Disc Brushes

Filling	DA mm | *inch*	KD mm | *inch*	H mm | *inch*	d	RPM max.	Pack.	Art.-No.
SIC 46/1.6	130 | *5 1/8*	20 | *3/4*	50 | *2*	M 14 x 2.0	2,500	1	*405.843*
SIC 60/1.5	130 | *5 1/8*	20 | *3/4*	50 | *2*	M 14 x 2.0	2,500	1	*405.844*
SIC 80/1.2	130 | *5 1/8*	20 | *3/4*	50 | *2*	M 14 x 2.0	2,500	1	**405.845**

Special Models

Band Saw Brushes
Wheel Brushes in circular saws or band saws are used for cleaning the chipping space. A wheel brush with diameter 80-100 mm is pressed against the saw blade (circular or band saw). By moving the saw blade or band the brush is rolling and it taking the chipping out of the shipping space. Hence a built-up edge is prevented and the durability of the saw blade extended. The used wheel brushes usually are with steel wire, corded wire or nylon filament. The brushes are suitable for all common machines.

Stripping Brushes
For the removal of laquer and other insulations from cables and electric equipment. The polished surface and the concentric running enable soft removal of laquer from the wires.

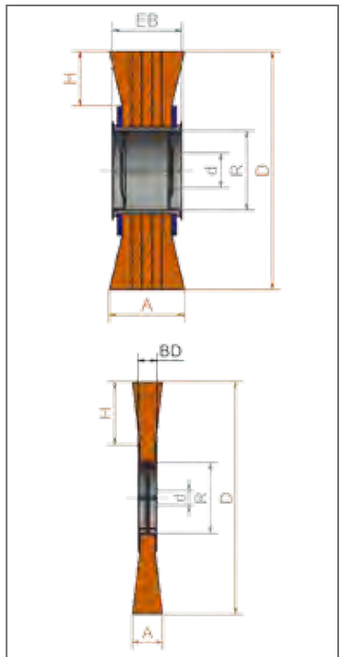

„A" can be up to 4 mm larger than **„BD"**
EB 3.0 mm with R > 60
EB 2.4 mm with R ≤ 60

Item Nos. in bold are available ex stock.
Consider our minimum order value for *italic printed* article numbers (see page 164).

STA	= steel wire, crimped
STM	= brass coated steel, crimped
STL	= cord wire, crimped
PA	= polyamide, crimped

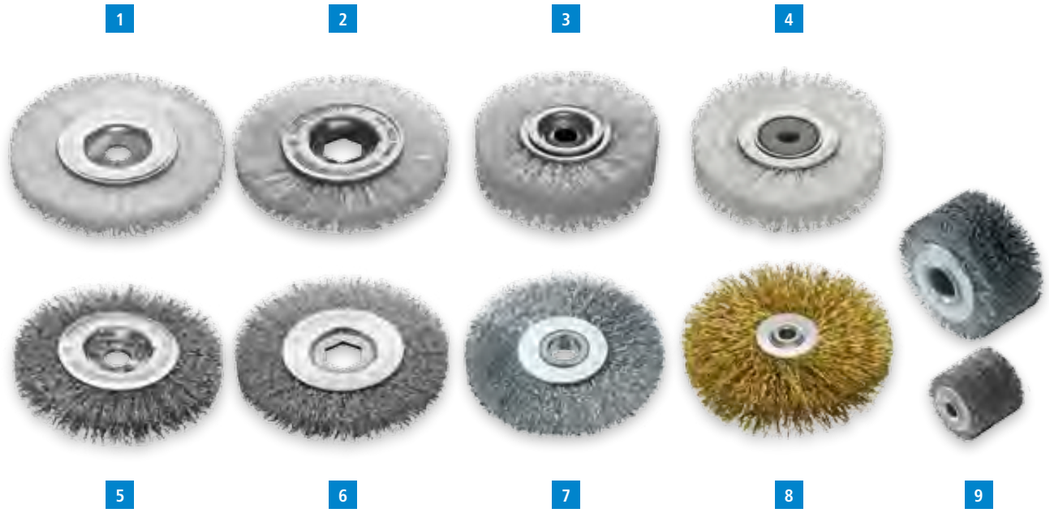

Band Saw Brushes, polyamide

	D mm | *inch*	A mm | *inch*	R mm | *inch*	H mm | *inch*	d mm	RPM max.	Pack.	**PA 0.50** | *0.020"* Art.-Nr.	**PA 0.80** | *0.031"* Art.-No.	**PA 1.00** | *0.039"* Art.-No.
1	85 | *3 11/32*	10 | *25/64*	30 | *1 3/16*	14 | *35/64*	12	8,000	10	*300.091*		
	100 | *3 15/16*	13 | *33/64*	30 | *1 3/16*	21 | *53/64*	12	8,000	10	**320.001**	**320.003**	**320.009**
	100 | *3 15/16*	13 | *33/64*	30 | *1 3/16*	21 | *53/64*	13	8,000	10	**320.004**		
	125 | *4 59/64*	13 | *33/64*	30 | *1 3/16*	33 | *1 19/64*	13	8,000	5			**330.001**
2	100 | *3 15/16*	13 | *33/64*	30 | *1 3/16*	21 | *53/64*	SW 17	8,000	5	**320.00K.17**	*320.01K.17*	
3	100 | *3 15/16*	20-22 | *25/32-55/64*	30 | *1 3/16*	23 | *29/32*	12	8,000	10		*323.002*	
4	100 | *3 15/16*	20 | *25/32*	30 | *1 3/16*	23 | *29/32*	12	8,000	5		*323.003**	

* bore with plastic sleeve

Band Saw Brushes, steel wire

	D mm | *inch*	A mm | *inch*	R mm | *inch*	H mm | *inch*	d mm	RPM max.	Pack.	**STA 0.20** Art.-No.	**STA 0.30** Art.-No.	**STM 0.20** Art.-No.	**STM 0.30** Art.-No.	**STL 4 x 0.25** Art.-No.
5	100 | *3 15/16*	13 | *33/64*	30 | *1 3/16*	21 | *53/64*	12	8,000	10		**320.161**			
	100 | *3 15/16*	13 | *33/64*	30 | *1 3/16*	21 | *53/64*	13	8,000	10		**320.161.13**			
6	100 | *3 15/16*	12 | *15/32*	30 | *1 3/16*	21 | *53/64*	SW 17	8,000	5		**320.16K.17**			
7	80 | *3 5/32*	12 | *15/32*	20 | 25/32	20 | 25/32	10	15,000	10	**312.141**				
8	60 | *2 23/64*	10-12 | 25/64-*5/32*	8 | 5/16	19 | 3/4	6	15,000	10			*300.742*		
	80 | *3 5/32*	15 | *19/32*	10 | *25/64*	27 | 1 1/6	6.8	15,000	10			*311.742.01*		
	80 | *3 5/32*	15 | *19/32*	10 | *25/64*	27 | 1 1/6	8	15,000	10				**311.762**	
	80 | *3 5/32*	18-20 | 45/64-25/32	10 | *25/64*	27 | 1 1/6	6	15,000	10					**310.702.06**

9 Stripping Brushes

D mm | *inch*	A mm | *inch*	R mm | *inch*	d mm	Pack.	**STA 0.10** | *0.004"* Art.-No.	**STA 0.15** | *0.006"* Art.-No.	**STA 0.20** | *0.008"* Art.-No.	**STA 0.25** | *0.010"* Art.-No.	**STA 0.30** | *0.012"* Art.-No.
30 | *1 3/16*	20 | *25/32*	8 | *5/16*	6	10	*301.213.10*	*301.213.15*	*301.213.20*		*301.213.30*
35 | *1 3/8*	20 | *25/32*	8 | *5/16*	6	10		*301.214.15*	**301.214.20**	available on demand	*301.214.30*
40 | *1 37/64*	25 | *1*	12 | *15/32*	10	10		*301.225.15*	**301.225.20**	*301.225.25*	*301.225.30*
80 | *3 5/32*	30 | *1 3/16*	30 | *1 3/16*	16	10			*301.236.20*	available on demand	*301.236.30*

Special Models

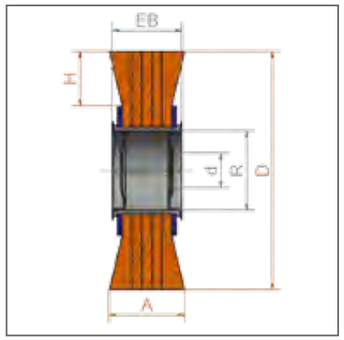

Small diameter crimped wheels SDW
LESSMANN small diameter crimped wheels have a manifold use, e.g. for deburring, cleaning, derusting or paint stripping on various work pieces and surfaces. A typical application e.g. is the cleaning of interior and exterior threads or the treatment of areas which are hard to reach.
The brushes are inserted directly into the machine or are mounted into a drilling machine or fast-moving item with a suitable drive arbor. Depending on the application and requirements several brushes can be mounted in a row. Suitable adapters are available on request.
The typical filling material LESSMANN offers is steel wire, stainless steel wire or abrasive nylon. On request other wire diameters and filling materials are available. All brushes are manufactured with a copper shell.

Wheel Brushes for the treatment of hard metal
Wheel brushes with diamond filling are often used for the rounding of edges of carbide or diamond tools.
Cutting edges on carbide tools extend the lifetime and allow a higher cutting speed. The treatment on major cutting edges of drills are mainly operated manually. LESSMANN wheel brushes with diamond support to decrease abrasion and to improve the surface quality of the work piece. Due to the consistent and narrow filling a clean and steady dipping of the edges is possible.
Surfaces of chip flutes of carbide drills are finished with brushes with aluminum oxide filling material. Finished chip flutes have a better process stability when drilling.

Stainless Steel Brushes
Information on working on stainless steel you find at www.lessmann.com

Item Nos. in bold are available ex stock.
Consider our minimum order value for *italic printed* article numbers (see page 164).

STH	= steel wire, high tensile, crimped
ROF	= stainless steel wire, crimped
SIC	= silicon carbide bristles
AO	= aluminium oxide bristles

1

2

3

4

Small Diameter crimped Wheels SDW

1

D mm | *inch*	A mm | *inch*	d mm | *inch*	H mm | *inch*	RPM max.	Pack.	**STA 0.15** | *0.006"* Art.-No.	**STA 0.20** | *0.008"* Art.-No.	**STA 0.35** | *0.014"* Art.-No.	**ROF 0.15** | *0.006"* Art.-No.
50 | *2*	10 | *3/8*	13 | *1/2*	13 | *1/2*	20,000	10	**35E.136**	**35E.146**		**35E.336**
63 | *2 1/2*	10 | *3/8*	13 | *1/2*	20 | *3/4*	20,000	10		**36E.146**	**36E.176**	
75 | *3*	12 | *1/2*	13 | *1/2*	20 | *3/4*	20,000	10		*37E.146*		**37E.336**
75 | *3*	12 | *1/2*	16 | *5/8*	22 | *7/8*	20.000	10	*37E.137*	**37E.147**		

2

D mm | *inch*	A mm | *inch*	d mm | *inch*	H mm | *inch*	RPM max.	Pack.	**SIC K120/0.6** Art.-No.	**SIC K180/0.9** Art.-No.	**SIC K320/0.6** Art.-No.
50 | *2*	10 | *3/8*	13 | *1/2*	12 | 1/2	20.000	10	**35E.846**	**35E.856**	**35E.876**
50 | *2*	10 | *3/8*	16 | *5/8*	12 | 1/2	20.000	10	**35E.847**	**35E.857**	**35E.877**
63 | *2 1/2*	10 | *3/8*	13 | *1/2*	18 | *5/8*	20.000	10	**36E.846**	**36E.856**	**36E.876**
63 | *2 1/2*	10 | *3/8*	16 | *5/8*	18 | *5/8*	20.000	10	**36E.847**		**36E.877**

Wheel Brushes for the treatment of hard metal

3

D mm | *inch*	A mm | *inch*	EB mm | *inch*	d mm | *inch*	H mm | *inch*	RPM max.	Pack.	**Diamant K400** Art.-No.
150 | *6*	5 | *13/64*	11 | *7/16*	20 | *3/4*	23 | *59/64*	3,000	1	*408.819.DB*
150 | *6*	10 | *3/8*	16.5 | *21/32*	20 | *3/4*	23 | *59/64*	3,000	1	*408.829.DB*
150 | *6*	15 | *5/8*	22 | *7/8*	20 | *3/4*	23 | *59/64*	3,000	1	*408.839.DB*

4

D mm | *inch*	A mm | *inch*	EB mm | *inch*	d mm | *inch*	H mm | *inch*	RPM max.	Pack.	**AO 600** Art.-No.
100 | *4*	15 | *5/8*	12 | *1/2*	16 | *5/8*	27 | *1*	3,000	1	*320.061**
150 | *6*	15 | *5/8*	15 | *5/8*	20 | *3/4*	23 | *59/64*	3,000	1	*345.051**

* Filling with angular cut

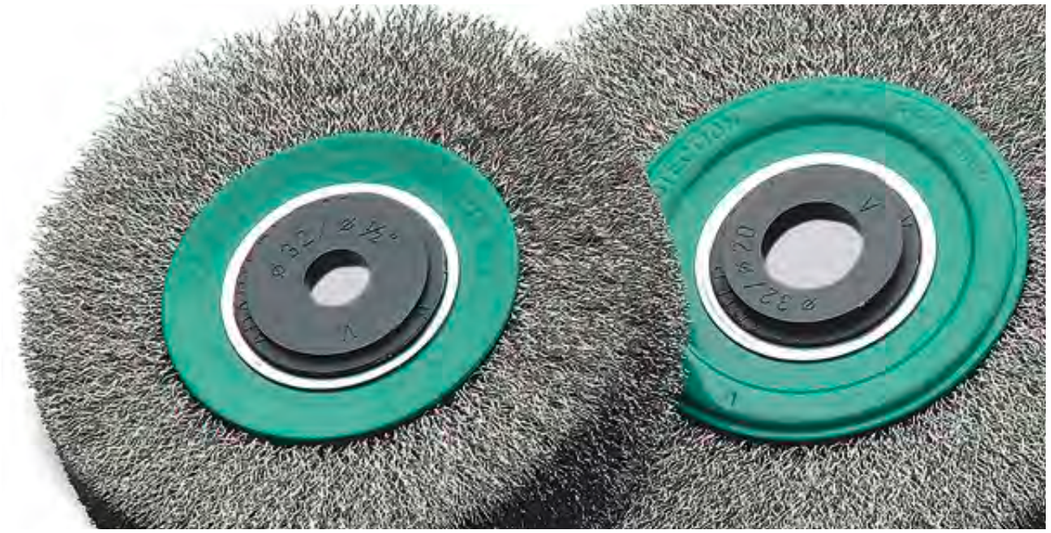

Adapters
With these adapters the bore can be reduced to the required size.
The wheel brushes are supplied with adapter sets which makes it possible to mount the brushes on all popular grinding machines.
The adapters have the following dimensions:

Set 1 / tube 30
30 / 1" / 22,2 / 20 / 16 / 1/2" / 12
Set 2 / tube 40:
40 / 32 / 1" / 22,2 / 20 / 16 / 1/2"
Set 3 / tube 50:
50 / 32 / 1" / 22,2 / 20 / 16 / 1/2"
Set 4 / tube 80 + 100:
brushes with metal discs, bore 50.8 and double keyway 7x13; plus adapter to bore 30. Further reduction possible with set 1.
Set 5 / tube 80 + 100:
brushes with metal discs, bore 50.8 and double keyway 7x13; plus adapter to bore 32. Further reduction possible with set 1.

A technical advice and safety information leaflet is included.

The practical adapter sets can also be ordered separately.

Single plastic reducing rings in many different dimensions can be supplied ex stock.

Drive Arbors
For use on drilling machines.

Metal Discs
Brushes with tube diameter 80 and 100 mm are supplied with our standard metal plates made of steel. Occasionally these metal plates are also required for brushes with smaller tubes. The metal plates on this page are therefore also suitable for the brushes on page 31 - 33. Please indicate the required bore size on your order and note that normally two metal plates are required for one brush.

Adapter

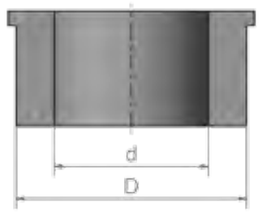

Drive Arbor Thread left

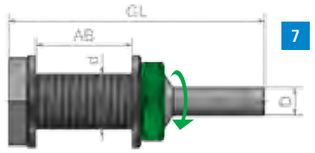

Drive Arbor Thread right

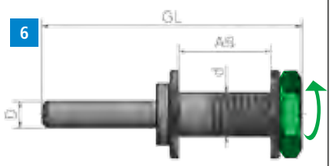

Item Nos. in bold are available ex stock.
Consider our minimum order value for *italic printed* article numbers (see page 164).

Adapter Sets

			D	d	Pack.	Art.-No.
1	Set 1	Tube 30	30	1" - 22.2 - 20 - 16 - 1/2" - 12	2	**000.886.63**
2	Set 2	Tube 40	40	32 - 1" - 22.2 - 20 - 16 - 1/2"	2	**000.886.64**
3	Set 3	Tube 50	50	32 - 1" - 22.2 - 20 - 16 - 1/2"	2	**000.886.65**
4	Set 4	Tube 80/100	50.8	30 (further adapters with Set 1)	2	**000.886.68**
	Set 5	Tube 80/100	50.8	32	2	**000.888.32**

5 Single plastic reducing rings in many different dimensions can be supplied ex stock.

EAN **Drive Arbors**

6

D mm | *inch*	GL mm | *inch*	d	AB	RPM max.	Pack.	Art.-No.
6 | *1/4*	60 | *2 3/8*	M 10 x 1,5	max. 18 mm	4,500	1	**000.041**
10 | *3/8*	60 | *2 3/8*	M 10 x 1,5	max. 18 mm	4,500	1	**000.042**
10 | *3/8*	75 | *3*	M 14 x 2,0	max. 29 mm	4,500	1	**000.043**

7

D mm | *inch*	GL mm | *inch*	d	AB	RPM max.	Pack.	Art.-No.
6 | *1/4*	40 | *1 3/8*	M 10 left	max. 15 mm	4,500	1	**000.044**
6 | *1/4*	50 | *2*	M 12 left	max. 20 mm	4,500	1	**000.045**

8 Metal Discs as Spare Part

	Pack.	Art.-No.
R 30	2	*000.631*
R 40	2	*000.641*
R 50	2	*000.651*
R 80	2	*000.661*
R100*	2	*000.671*

Bore must be indicated!
* On request with double keyset 12 x 7 (50.8 / 52.9 / 54.5)

LESSMANN®
THE GERMAN BRUSH COMPANY

DEBURRING BRUSHES

Deburring Brushes

Part before brushing

Part after brushing

Deburring Brushes
Specially developed wheel brushes for deburring. These are suitable for all common deburring machines. Although they are heavier than other brushes because of their dense filling, we exclude any inbalance by evenly arranged filling material and the testing of every brush. Filled with high-quality wire, these brushes have a longer service life.

All brushes are with double keyway. Please indicate the required bore.

On the following pages you will find the standard measurements. Special measurements are available on request.

Deburring Brushes with Cord Wire STL / ROL
Deburring Brushes with cord wire are usually used for working on very hard materials. This wire construction gives the wires additional hold, hence the output of the brush is increased.

Encapsulated Deburring Brushes
Are ideal for an aggressive and very exact working. An early beak of the wires can be prevented. Therefore the brush has a longer life time and a better durability.

Stainless Steel Brushes
LESSMANN brushes with stainless steel wire have green site plates.
More information for brush applications on stainless materials you will find at www.lessmann.com

For more information about deburring please ask for our leaflet "Deburring with brushes".

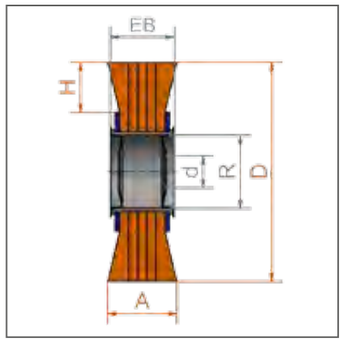

Item Nos. in bold are available ex stock.
Consider our minimum order value for *italic printed* article numbers (see page 164).

STH = steel wire, high tensile, crimped
STM = brass coated steel, crimped
STL = cord wire, crimped

You can find our **Enquiry Forms** in the respecitve category under:
www.lessmann.com/index.php/en/content/view/full/61
or in the catalog from page 158

1 2

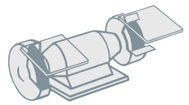

EAN **1 Deburring Brushes, Steel Wire**

D mm | *inch*	A mm | *inch*	EB	R mm | *inch*	H mm | *inch*	d Stand.	RPM max.	Pack.	**STH 0.20** | *0.008"* Art.-No.	**STH 0.35** | *0.014"* Art.-No.	**STH 0.50** | *0.020"* Art.-No.
250 | *10*	60 | *2 3/8*	58	100 | *4*	50 | *2*	50.8	3,600	1	**377.051**	**377.053**	**377.054**
250 | *10*	60 | *2 3/8*	58	100 | *4*	50 | *2*	52,9	3,600	1		**377.053.26**	
250 | *10*	60 | *2 3/8*	58	100 | *4*	50 | *2*	54,5	3,600	1		**377.053.27**	
250 | *10*	60 | *2 3/8*	55	100 | *4*	50 | *2*	100	3,600	1	*377.051.00*	*377.053.00*	*377.054.00*
250 | *10*	60 | *2 3/8*	53	100 | *4*	50 | *2*	50.8	3,600	1	*377.051.T1*	*377.053.T1*	*377.054.T1*
250 | *10*	60 | *2 3/8*	50	100 | *4*	50 | *2*	100	3,600	1	*377.051.TA*	**377.053.TA**	*377.054.TA*
250 | *10*	80 | *3 1/4*	79	100 | *4*	50 | *2*	50.8	3,600	1	*377.052*	*377.095*	*377.077*
250 | *10*	100 | *4*	99	100 | *4*	50 | *2*	50.8	3,600	1	*377.059*	*377.066*	*377.096*
300 | *12*	60 | *2 3/8*	49	100 | *4*	60 | *2 3/8*	50.8	3,000	1	*387.051*	**387.053**	*387.054*
300 | *12*	100 | *4*	93	100 | *4*	60 | *2 3/8*	50.8	3,000	1	available on demand	*387.055*	available on demand

EAN **2 Deburring Brushes, Cord Wire, Brass Coated Steel Wire**

D mm | *inch*	A mm | *inch*	EB	R mm | *inch*	H mm | *inch*	d Stand.	RPM max.	Pack.	**STL 0.38** | *0.015"* Art.-No.	**STM 0.38** | *0.015"* Art.-No.
250 | *10*	60 | *2 3/8*	58	100 | *4*	50 | *2*	50.8	3,600	1	**377.043**	*377.063*
250 | *10*	60 | *2 3/8*	55	100 | *4*	50 | *2*	100	3,600	1	*377.043.00*	*377.063.00*
250 | *10*	60 | *2 3/8*	53	100 | *4*	50 | *2*	50.8	3,600	1	*377.043.T1*	*377.063.T1*
250 | *10*	60 | *2 3/8*	50	100 | *4*	50 | *2*	100	3,600	1	*377.043.TA*	*377.063.TA*
250 | *10*	80 | *3 1/4*	79	100 | *4*	50 | *2*	50.8	3,600	1	*377.045*	available on demand
250 | *10*	100 | *4*	99	100 | *4*	50 | *2*	50.8	3,600	1	*377.048*	available on demand

All brushes with metal disc and bore 50.8 mm and double keyway 13 x 7 mm!
Further standard bores: 52.9 / 54.5 mm; d min/max: 30 mm ≤ d ≤ R; Deburring Brushes also available with tube 120.

1 2 3 4

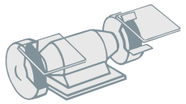

Deburring Brushes, Stainless Steel Wire

D mm | *inch*	A mm | *inch*	EB	R	H	d Stand.	RPM max.	Pack.	1 ROH 0.20 | *0.008"* Art.-No.	1 ROH 0.35 | *0.014"* Art.-No.	1 ROH 0.50 | *0.020"* Art.-No.	2 ROL 0.35 | *0.014"* Art.-No.
250 | *10*	60 | *2 3/8*	58	100	50	50.8	3,600	1	**377.044**	**377.089**	*377.094*	**377.707**
250 | *10*	60 | *2 3/8*	58	100	50	52,9	3,600	1		**377.089.26**		
250 | *10*	60 | *2 3/8*	58	100	50	54,5	3,600	1		**377.089.27**		
250 | *10*	60 | *2 3/8*	55	100	50	100	3,600	1	*377.044.00*	*377.089.00*	*377.094.00*	*377.707.00*
250 | *10*	60 | *2 3/8*	53	100	50	50.8	3,600	1	*377.044.T1*	*377.089.T1*	*377.094.T1*	*377.707.T1*
250 | *10*	60 | *2 3/8*	50	100	50	100	3,600	1	*377.044.TA*	*377.089.TA*	*377.094.TA*	*377.707.TA*
250 | *10*	80 | *3 1/4*	79	100	50	50.8	3,600	1	*377.047*	*377.090*	*377.097*	available on demand
250 | *10*	100 | *4*	99	100	50	50.8	3,600	1	*377.049*	*377.093*	*377.099*	available on demand
300 | *12*	100 | *4*	95	100	60	50.8	3,000	1	available on demand	available on demand	available on demand	available on demand

All brushes with metal disc and bore 50.8 mm and double keyway 13 x 7 mm!
Further standard bores: 52.9 / 54.5 mm; d min/max: 30 mm ≤ d ≤ R; Deburring Brushes also available with tube 120.

Deburring Brushes, encapsulated

D mm | *inch*	A mm | *inch*	R	H	d Stand.	Pack.	3 STH 0.20 | *0.008"* Art.-No.	3 STH 0.35 | *0.014"* Art.-No.	4 ROH 0.20 | *0.008"* Art.-No.	4 ROH 0.35 | *0.014"* Art.-No.
250 | *10*	13 | *1/2*	100	58	33	1	*370.241.KG*	**370.271.KG**	**370.441.KG**	**370.471.KG**
250 | *10*	20 | *3/4*	100	57	33	1	*370.242.KG*	*370.272. KG*	**370.442.KG**	**370.472.KG**

2 1

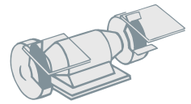

1 Deburring Brushes, Silicon Carbide Bristles

D mm | *inch*	A mm | *inch*	EB	R mm | *inch*	H mm | *inch*	d Stand.	RPM max.	Pack.	SIC 80/1.2 Art.-No.	SIC 120/1.1 Art.-No.	SIC 180/1.0 Art.-No.	SIC 320/0.6 Art.-No.
250 | *10*	60 | *2 3/8*	58	100 | *4*	50 | *2*	50.8	3,600	1	*377.824*	**377.835**	**377.854**	*377.875*
250 | *10*	60 | *2 3/8*	55	100 | *4*	50 | *2*	100	3,600	1	*377.824.00*	*377.835.00*	*377.854.00*	*377.875.00*
250 | *10*	60 | *2 3/8*	53	100 | *4*	50 | *2*	50.8	3,600	1	*377.824.T1*	*377.835.T1*	*377.854.T1*	*377.875.T1*
250 | *10*	60 | *2 3/8*	50	100 | *4*	50 | *2*	100	3,600	1	*377.824.TA*	*377.835.TA*	*377.854.TA*	*377.875.TA*
250 | *10*	80 | *3 1/4*	79	100 | *4*	50 | *2*	50.8	3,600	1	available on demand	*377.837*	available on demand	available on demand
250 | *10*	100 | *4*	99	100 | *4*	50 | *2*	50.8	3,600	1	available on demand	*377.839*	available on demand	available on demand
300 | *12*	60 | *2 3/8*	55	100 | *4*	60 | *2 3/8*	50.8	3,000	1	*387.824*	available on demand	available on demand	available on demand
300 | *12*	100 | *4*	95	100 | *4*	60 | *2 3/8*	50.8	3,000	1	available on demand	available on demand	available on demand	available on demand

2 Deburring Brushes, mixed filament

D mm | *inch*	A mm | *inch*	EB	R mm | *inch*	H mm | *inch*	d Stand.	RPM max.	Pack.	ROF 0.20 - SIC 120 Mixed filament with mixing proportion 1:1 Art.-No.
250 | *10*	60 | *2 3/8*	58	100 | *4*	50 | *2*	50.8	3,600	1	*377.091*
250 | *10*	60 | *2 3/8*	55	100 | *4*	50 | *2*	100	3,600	1	*377.091.00*

All brushes with metal disc and bore 50.8 mm and double keyway 13 x 7 mm!
Further standard bores: 52.9 / 54.5 mm; d min/max: 30 mm ≤ d ≤ R; Deburring Brushes also available with tube 120.

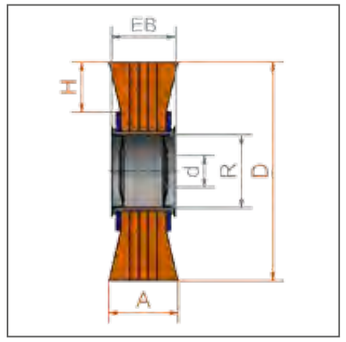

Item Nos. in bold are available ex stock.
Consider our minimum order value for *italic printed* article numbers (see page 164).

STH = steel wire, high tensile, crimped
ROL = stainless steel, cord wire
ROH = stainless steel wire, high tensile, crimped
ROF = stainless steel wire, crimped
SIC = silicon carbide bristles

Roller Brushes

Roller Brushes
Roller Brushes for the use in deburring machines. For Deburring e.g. cutting edges of tubes.
As filling material you can choose from steel and stainless steel wire, brass coated steel wire or cord wire. These brushes feature with their dense filling.

Roller Brushes
Deburring brushes are available with
D = 250 - 400 mm and
A = 55 - 700 mm

In your inquiry please indicate measure D, A and the bore e. g. 50.8 mm, 52.9 mm or 54.5 mm with double keyway 13 x 7 mm. Other bores up to 120 mm are available on demand.

Moreover we offer with our welded metal plate special collets for the roller brushes. Bores and keyways will be produced customized.

Note: Due to our advanced manufacturing technology it is possible to produce balanced roller brushes without balancing weights. Hence the brush has a steady run throughout its whole lifetime.

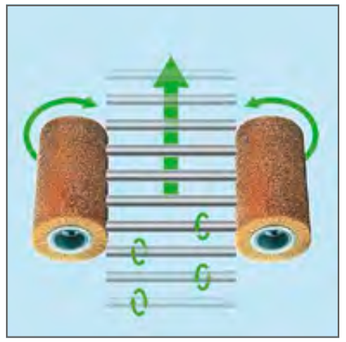

Function chart of a deburring machine with roller brushes

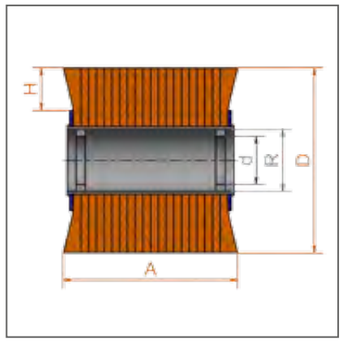

Item Nos. in bold are available ex stock.
Consider our minimum order value for *italic printed* article numbers (see page 164).

STH	= steel wire, high tensile, straight
STL	= cord wire, crimped
ROH	= stainless steel wire, high tensile, crimped
SIC	= silicon carbide bristles

Strip brushes for deburring machines you find on pages 154.

Roller Brushes, Steel Wire

D mm | *inch*	A mm | *inch*	R mm | *inch*	H mm | *inch*	d Stand.	RPM max.	Pack.	**STH 0.20** | *0.008"* Art.-No.	**STH 0.35** | *0.014"* Art.-No.	**STH 0.50** | *0.020"* Art.-No.	**STL 0.38** | *0.015"* Art.-No.
250 | *10*	300 | *12*	100 | *4*	50 | *2*	100	3,600	1	*377.240.30*	*377.270.30*	*377.290.30*	*377.780.30*
250 | *10*	460 | *18*	100 | *4*	50 | *2*	100	3,600	1	*377.240.46*	*377.270.46*	*377.290.46*	*377.780.46*
250 | *10*	600 | *24*	100 | *4*	50 | *2*	100	3,600	1	*377.240.60*	*377.270.60*	*377.290.60*	*377.780.60*
300 | *12*	460 | *18*	100 | *4*	60 | *2 3/8*	100	3,000	1	*387.240.46*	*387.270.46*	*387.290.46*	*387.780.46*
300 | *12*	450 | *17 7/8*	120 | *4 3/4*	50 | *2*	120	3,000	1		*388.270.45*		
300 | *12*	460 | *18*	120 | *4 3/4*	50 | *2*	120	3,000	1	*388.240.46*	*388.270.46*	*388.290.46*	*388.780.46*
300 | *12*	600 | *24*	120 | *4 3/4*	50 | *2*	120	3,000	1	*388.240.60*	*388.270.60*	*388.290.60*	*388.780.60*

Roller Brushes, Stainless Steel, Abrasive Bristles

D mm | *inch*	A mm | *inch*	R mm | *inch*	H mm | *inch*	d Stand.	RPM max.	Pack.	**ROH 0.20** | *0.008"* Art.-No.	**ROH 0.35** | *0.014"* Art.-No.	**ROH 0.50** | *0.020"* Art.-No.	**SIC 120 / 1.1** Art.-No.
250 | *10*	300 | *12*	100 | *4*	50 | *2*	100	3,600	1	*377.440.30*	*377.470.30*	*377.490.30*	*377.830.30*
250 | *10*	460 | *18*	100 | *4*	50 | *2*	100	3,600	1	*377.440.46*	*377.470.46*	*377.490.46*	*377.830.46*
250 | *10*	600 | *24*	100 | *4*	50 | *2*	100	3,600	1	*377.440.60*	*377.470.60*	*377.490.60*	*377.830.60*
300 | *12*	460 | *18*	100 | *4*	60 | *2 3/8*	100	3,000	1	*387.440.46*	*387.470.46*	*387.490.46*	*387.830.46*
300 | *12*	460 | *18*	120 | *4 3/4*	50 | *2*	120	3,000	1	*388.440.46*	*388.470.46*	*388.490.46*	*388.830.46*
300 | *12*	600 | *24*	120 | *4 3/4*	50 | *2*	120	3,000	1	*388.440.60*	*388.470.60*	*388.490.60*	*388.830.60*

Other measurements and filling materials as well as collets in special measurements are available on request.

Deburring End Brushes

Deburring End Brushes
These brushes are perfect for deburring tubes, profiles or even plane surfaces. Deburring end brushes are used in a set of 8, 16 or 24 single end brushes integrated in one deburring device.

The metal bush fits all standard collets.

Stainless Steel
Information on working on stainless steel material you find at. www.lessmann.com

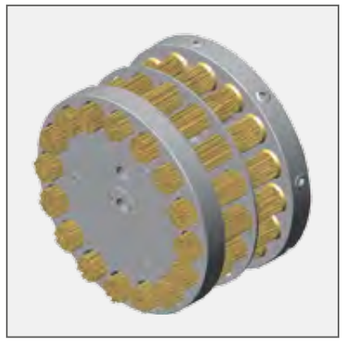

Deburring device for deburring end brushes

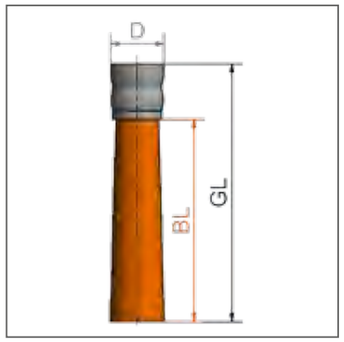

Item Nos. in bold are available ex stock.
Consider our minimum order value for *italic printed* article numbers (see page 164).

STH	= steel wire, high tensile, straight
STL	= cord wire, crimped
ROH	= stainless steel wire, high tensile, crimped
SIC	= silicon carbide bristles

1 Deburring End Brushes, Steel Wire

D mm | *inch*	GL mm | *inch*	BL mm | *inch*	Pack.	**STH 0.20** | *0.008"* Art.-No.	**STH 0.35** | *0.014"* Art.-No.	**STH 0.50** | *0.020"* Art.-No.
25 | *1*	120 | *4 3/4*	95 | *3 1/2*	16	**048.241**	**048.271**	**048.291**

2 Deburring End Brushes, CordWire

D mm | *inch*	GL mm | *inch*	BL mm | *inch*	Pack.	**STL 0.35** | *0.014"* Art.-No.
25 | *1*	120 | *4 3/4*	95 | *3 1/2*	16	**048.701**

3 Deburring End Brushes, Stainless Steel Wire

D mm | *inch*	GL mm | *inch*	BL mm | *inch*	Pack.	**ROH 0.20** | *0.008"* Art.-No.	**ROH 0.35** | *0.014"* Art.-No.	**ROH 0.50** | *0.020"* Art.-No.
25 | *1*	120 | *4 3/4*	95 | *3 1/2*	16	**048.441**	**048.471**	**048.491**

Deburring End Brushes, Silicon Carbide Bristles, mixed wire

				4			5
D mm | *inch*	GL mm | *inch*	BL mm | *inch*	Pack.	**SIC 80 / 1.2** Art.-No.	**SIC 120 / 1.1** Art.-No.	**SIC 180 / 1.0** Art.-No.	**SIC 120 / 1.1 - ROH 0.20** Art.-No.
25 | *1*	120 | *4 3/4*	95 | *3 1/2*	16	**048.821**	**048.841**	**048.851**	**048.901***
25 | *1*	120 | *4 3/4*	95 | *3 1/2*	16				**048.941****

* Mixing proportion 1:1 | ** Mixing proportion 2:1

Brush Adapter for deburring end brushes

Suitable for all common deburring machines	Art.-No
Device for 8 End Brushes	available on demand
Device for 16 End Brushes	*048.999*
Device for 24 End Brushes	*048.998*

LESSMANN

Cup Brushes

Cup Brushes
Knot cup brushes are for heavy duty use: for the preparing of metal surfaces before painting, the removal of slag, rust, scale or concrete waste.
The brushes diameter 80/100/125 mm (Art. No. 484/486/487) have a **bridle** fitted for stability. The bridle can be removed after wear of the wire exposing a further 20 mm of useable wire!

We recommend the use of our brush with diameter 90 mm for small angle grinders. Compared to the common brush with diameter 65 mm this model has 50% more wire and it is really something special in the brush market!

Knot Cup Brushes with extra long filling
For the use on large areas and for a flexible cleaning and derusting of e.g. shipyards. For a use in angle grinders. Easy working also in areas which are hard to reach.

Cup Brushes, left-right knotted
Left-right knotted cup brushes usually are more aggressive, hence they are often used for heavy brushing operations.
Besides the knots open less, therefore they are ideal for the treatment of edges.

Cup Brushes
Cup brushes with crimped wire are ideal for working on large surfaces with angle grinders. They can also be used for the removal of rust, paint, dirt or scale and for polishing.

Special Designs
The cup brushes can be delivered with different filling materials according to your requirements e. g. brushes with brass cups and brass wire for non-sparkling applications.

For promoting sales all standard wheel brushes are packed individually for self display. They are also available in bulk.

Stainless Steel Brushes
LESSMANN brushes with stainless steel wire have green cups. More information for brush applications on stainless materials you will find at www.lessmann.com

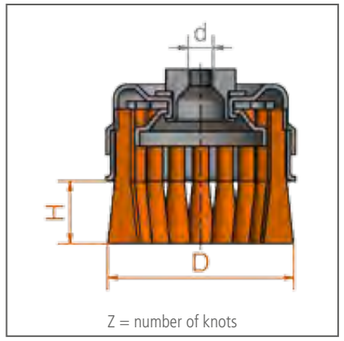

Chunky packaging
Many articles you receive as standard in handy covering boxes (10 pieces per carton).

Item Nos. in bold are available ex stock.
Consider our minimum order value for *italic printed* article numbers (see page 164).

STH	= steel wire, high tensile, straight
STM	= brass coated steel, straight
MES	= brass wire
BRO	= bronze wire

You can find our **tutorials** here: www.lessmann.com/index.php/en/content/view/full/711

You can find our **Enquiry Forms** in the respecitve category under: www.lessmann.com/index.php/en/content/view/full/61 or in the catalog from page 158

EAN **Knot Cup Brushes without Bridle, 1 Row, Steel Wire, Brass coated Steel Wire**

	D mm | *inch*	d	H mm | *inch*	Z	RPM max.	Pack.	STH 0.35 | *0.014"* Art.-No.	STH 0.50 | *0.020"* Art.-No.	STH 0.80 | *0.031"* Art.-No.	5 STM 0.35 | *0.014"* Art.-No.	5 STM 0.50 | *0.020"* Art.-No.
1	65 | *2 1/2*	M 10 x 1.5	20 | *3/4*	18	12,500	1	**482.114***	**482.214***	available on demand		
1	65 | *2 1/2*	M 14 x 2.0	20 | *3/4*	18	12,500	1	**482.117***	**482.217***	**482.317***	**482.117.SM***	**482.217.SM***
1	75 | *3*	M 14 x 2.0	20 | *3/4*	20	12,500	1	**483.117***	**483.217***	*483.317*		
2	90 | *3 1/2*	M 14 x 2.0	22 | *7/8*	20	11,500	1	*485.137**	**485.237***	*485.337*		**485.237.SM***
3	100 | *4*	M 14 x 2.0	25 | *1*	26	9,000	1	available on demand	**486.237***	available on demand		
3	125 | *5*	M 14 x 2.0	25 | *1*	32	7,000	1	available on demand	**487.237**	available on demand		
3	150 | *6*	M 14 x 2.0	30 | *1 1/4*	36	6,600	1	available on demand	**488.237**	available on demand		
3	150 | *6*	5/8"-11 UNC	30 | *1 1/4*	36	6,600	1	available on demand	*488.238*	available on demand		
4	65 | *2 1/2*	M 14 x 2.0	20 | *3/4*	18	12,500	1	available on demand	**482.217.WZ***			

EAN **Knot Cup Brushes without Bridle, 1 Row, brass wire, bronze wire**

D mm | *inch*	d	H mm | *inch*	Z	RPM max.	Pack.	5 MES 0.35 | *0.014"* Art.-No.	5 MES 0.50 | *0.020"* Art.-No.	6 BRO 0.50 | *0.020"* Art.-No.
65 | *2 9/16*	M 14 x 2.0	20 | *51/64*	18	12,500	1	**482.017**	**482.027**	**482.057**

EAN **7 Knot Cup Brushes, without Bridle, 1 Row, Steel Wire, with extra long filling**

D mm | *inch*	d	H mm | *inch*	Z	RPM max.	Pack.	STH 0.35 | *0.014"* Art.-No.	STH 0.50 | *0.020"* Art.-No.
80 | *3 1/4*	M 14 x 2.0	33 | *1 1/4*	18	12,500	25	**480.117**	*480.217*

EAN **8 Knot Cup Brushes without Bridle, 2 Rows, Steel Wire**

D mm | *inch*	d	H mm | *inch*	Z	RPM max.	Pack.	STH 0.35 | *0.014"* Art.-No.	STH 0.50 | *0.020"* Art.-No.	STH 0.80 | *0.031"* Art.-No.
100 | *4*	5/8" - 11 UNC	25 | *1*	26+20	9,000	1	*486.148*	*486.248*	*486.348*
125 | *5*	5/8" - 11 UNC	25 | *1*	32+26	7,000	1	available on demand	*487.248*	available on demand
150 | *6*	5/8" - 11 UNC	25 | *1*	36+32	6,600	1	available on demand	*488.248*	available on demand

* Packed 10 pieces per carton

Cup Brushes

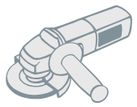

EAN **Knot Cup Brushes with Bridle, 1 Row, Steel Wire**

							1		
D	d	H	H_1	Z	RPM	Pack.	**STH 0.35** | *0.014"*	**STH 0.50** | *0.020"*	**STH 0.80** | *0.031"*
mm | *inch*	mm | *inch*	mm | *inch*	mm | *inch*		max.		Art.-No.	Art.-No.	Art.-No.
80 | *3 1/4*	22.2 | *7/8*	25 | *1*	15 | *5/8*	20	9,000	1			**484.311****
80 | *3 1/4*	M 14 x 2.0	25 | *1*	15 | *5/8*	20	9,000	1	**484.117***	**484.217***	**484.317***
80 | *3 1/4*	5/8" - 11 UNC	25 | *1*	15 | *5/8*	20	9,000	1	*484.118*	**484.218**	*484.318*
100 | *4*	22.2 | *7/8*	23 | *7/8*	12 | *1/2*	26	9,000	1	**486.111**	**486.211***	**486.311***
100 | *4*	M 14 x 2.0	23 | *7/8*	12 | *1/2*	26	9,000	1	**486.117***	**486.217***	**486.317***
100 | *4*	5/8" - 11 UNC	23 | *7/8*	12 | *1/2*	26	9,000	1	*486.118*	**486.218***	*486.318**
125 | *5*	22.2 | *7/8*	23 | *7/8*	15 | *5/8*	32	7,000	1	*487.111*	**487.211**	**487.311**
125 | *5*	M 14 x 2.0	23 | *7/8*	15 | *5/8*	32	7,000	1	**487.117**	**487.217**	**487.317**
125 | *5*	5/8" - 11 UNC	23 | *7/8*	15 | *5/8*	32	7,000	1	*487.118*	**487.218**	*487.318*

EAN **Knot Cup Brushes with Bridle, 1 Row, bronze wire, fittings brass**

							2
D	d	H	H_1	Z	RPM	Pack.	**BRO 0.50** | *0.020"*
mm | *inch*	mm | *inch*	mm | *inch*	mm | *inch*		max.		Art.-No.
125 | *5*	16 | *5/8*	23 | *7/8*	15 | *5/8*	32	4,000	1	*487.011.MS*

After removing the bridle there is the following further trimming length (see measure H1).

* Packed 10 pieces per carton.
** This brush doesn't work with angle grinders.

Item Nos. in bold are available ex stock.
Consider our minimum order value for *italic printed* article numbers (see page 164).

STH = steel wire, high tensile, straight
ROH = stainless steel wire, high tensile, straight
BRO = bronze wire

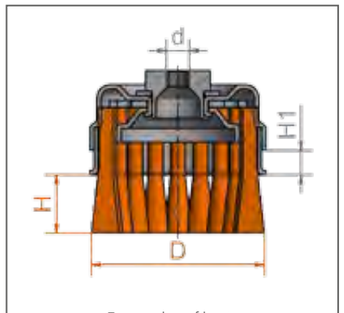

Z = number of knots

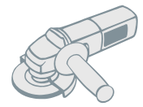

EAN **Knot Cup Brushes without Bridle, 1 Row, Stainless Steel Wire**

	D	d	H	Z	RPM	Pack.	**ROH 0.35** | *0.014"*	**ROH 0.50** | *0.020"*
	mm | *inch*		mm | *inch*		max.		Art.-No.	Art.-No.
1	65 | *2 1/2*	M 10 x 1.5	20 | *3/4*	18	12,500	1	*482.714*	*482.814**
1	65 | *2 1/2*	M 14 x 2.0	20 | *3/4*	18	12,500	1	**482.717***	**482.817***
1	75 | *3*	M 14 x 2.0	20 | *3/4*	20	12,500	1	available on demand	*483.817**
1	80 | *3 1/4*	M 14 x 2.0	33 | *1 1/4*	18	15,500	25	**480.717**	available on demand
2	65 | *2 1/2*	M 14 x 2.0	20 | *3/4*	18	12,500	1	available on demand	**482.817.WZ***

EAN **3** **Knot Cup Brushes with Bridle, 1 Row, Stainless Steel Wire**

D	d	H	H_1	Z	RPM	Pack.	**ROH 0.35** | *0.014"*	**ROH 0.50** | *0.020"*
mm | *inch*	mm | *inch*	mm | *inch*	mm | *inch*		max.		Art.-No.	Art.-No.
80 | *3 1/4*	M 14 x 2.0	25 | *1*	15 | *5/8*	20	9,000	1	**484.717**	**484.817***
80 | *3 1/4*	5/8" - 11 UNC	25 | *1*	15 | *5/8*	20	9,000	1	*484.718*	*484.818*
100 | *4*	M 14 x 2.0	23 | *7/8*	12 | *1/2*	26	9,000	1	**486.717***	**486.817***
100 | *4*	5/8" - 11 UNC	23 | *7/8*	12 | *1/2*	26	9,000	1	*486.718*	*486.818*
125 | *5*	M 14 x 2.0	23 | *7/8*	15 | *5/8*	32	9,000	1	available on demand	**487.817**

* Packed 10 pieces per carton

Cup Brushes

Cup Brushes with Crimped Wire

D mm | *inch*	d mm | *inch*	H	RPM max.	Pack.	1 STA 0.20 | *0.008"* Art.-No.	1 STA 0.35 | *0.014"* Art.-No.	1 STA 0.50 | *0.020"* Art.-No.	2 ROH 0.30/0.35 | *0.012"* Art.-No.	3 MES 0.30 | *0.012"* Art.-No.
65 | *2 3/8*	M 10 x 1,5	20	12,000	1		**421.164***		*421.364*	*421.564*
65 | *2 3/8*	M 14 x 2.0	20	12,000	1	**421.147**	**421.167***	**421.197**	**421.367***	**421.567***
75 | *3*	M 14 x 2.0	22	12,500	1		**423.167***	available on demand	**423.367***	available on demand
75 | *3*	5/8" - 11 UNC	22	12,500	1		**423.168***	available on demand	*423.368*	available on demand
80 | *3 1/4*	22.2 | *7/8*	25	8,500	1		**424.171***	available on demand	*424.361*	available on demand
80 | *3 1/4*	M 14 x 2.0	25	8,500	1	**424.147**	**424.177***	**424.197**	**424.367***	**424.567**
80 | *3 1/4*	5/8" - 11 UNC	25	8,500	1		*424.178*	*424.198*	*424.368*	available on demand
100 | *4*	22.2 | *7/8*	30	9,000	1		**426.171***	*426.191*	*426.361*	
100 | *4*	M 14 x 2.0	30	9,000	1	**426.147****	**426.177***	**426.197***	**426.367***	**426.567**
100 | *4*	5/8" - 11 UNC	30	9,000	1		**426.178***	*426.198*	*426.368*	*426.568*
125 | *5*	22.2 | *7/8*	30	8,000	1		**427.171****	available on demand	available on demand	available on demand
125 | *5*	M 14 x 2.0	30	8,000	1	**427.147**	**427.177**	**427.297**	**427.367***	**427.567***
125 | *5*	5/8" - 11 UNC	30	8,000	1		**427.178**	*427.298*		
150 | *6*	22.2 | *7/8*	40	6,500	1		**429.171**	*429.191*		
150 | *6*	M 14 x 2.0	40	6,500	1		**429.177**	*429.197*	*429.367*	
150 | *6*	5/8" - 11 UNC	40	6,500	1		*429.178*	*429.198*		

Cup Brushes, Brass Coated Steel Wire, Abrasive Filament

D mm | *inch*	d	H	RPM max.	Pack.	STL 0.35 | *0.014"* Art.-No.	STM 0.30 | *0.012"* Art.-No.	4 SIC 80/1.2 Art.-No.	4 SIC 180/0.9 Art.-No.
65 | *2 3/8*	M 14 x 2.0	20	12,000	1		**421.767**	**421.827**	*421.857*
100 | *4*	22.2 | *7/8*	30	9,000	1	*426.701*			
100 | *4*	M 14 x 2.0	30	9,000	1		**426.767**		

* Packed 10 pieces per carton.
** This brush doesn't work with angle grinders.

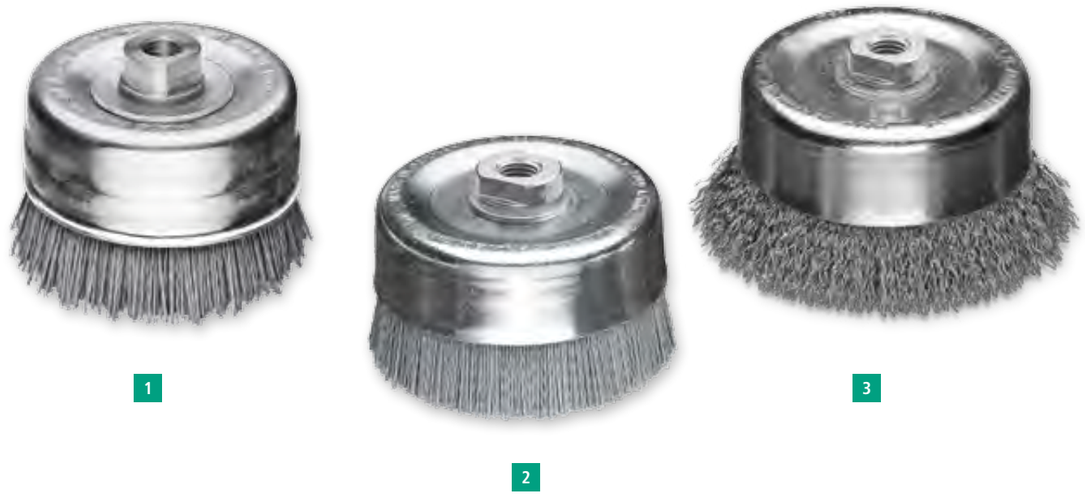

Cup Brushes, Straight Filament

	D mm | *inch*	d mm | *inch*	H	RPM max.	Pack.	STH 0.35 | *0.014"* Art.-No.	STM 0.35 | *0.014"* Art.-No.	STL 0.35 Art.-No.	SIC 80/1.2 Art.-No.	SIC K180/1.0 Art.-No.
1	90 | *3 1/2*	M 14	25	9,000	1				**446.827***	***446.857****
1	90 | *3 1/2*	22.2 | *7/8*	25	9,000	1				available on demand	*446.851**
3	100 | *4*	M 14	30	9,000	1	*446.277**	*446.777**			
3	100 | *4*	22.2 | *7/8*	30	9,000	1	*446.271**	*446.771**	**446.701***		
2	110 | *4 1/2*	M 14	30	7,000	1				**447.827***	**447.857***
3	125 | *5*	M 14	30	7,000	1	**447.277***	available on demand	*447.707*		

1 with bridle | * Packed 10 pieces per carton

Cup Brushes with Straight Wire
They are used for deburring surfaces, mostly in machining centers. The brushes are available with steel wire, stainless steel wire, abrasive nylon or any other filament. Due to the straight cup the filament of the brush is less flaring out and more cone points of the bristles work on the surface. Please contact us for more information!

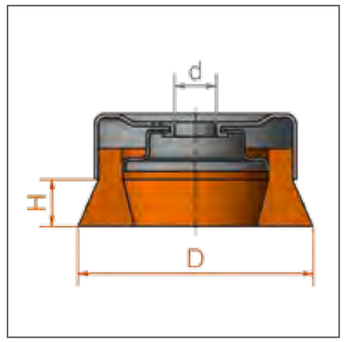

Item Nos. in bold are available ex stock.
Consider our minimum order value for *italic printed* article numbers (see page 164).

STA = steel wire, crimped
STH = steel wire, high tensile, straight
STM = brass coated steel, crimped
STL = cord wire, crimped
ROH = stainless steel wire, high tensile, straight
MES = brass wire, crimped
SIC = silicon carbide bristles

Bevel Brushes

Bevel Brushes
The special shape of these brushes enables the user to work in hard to reach places. The knots are left hand twisted to increase stability. For promoting sales all standard knot bevel brushes are packed individually for self display. These brushes are also available bulk packed.

Wheel Brushes with thread
Like bevel brushes, wheel brushes with a thread are ideal for working in areas which are hard to reach. Usually the brushes are used on angle grinders.

Other measurements and filling materials are available on request.

Stainless Steel Brushes
LESSMANN brushes with stainless steel wire have green cups. We use wire with material number 1.4310. Material number 1.4401 can be used on request.
More information for brush applications on stainless materials you will find at www.lessmann.com

Bevel Brushes, left-right knotted
Left-right knotted bevel brushes usually are more aggressive, hence they are often used for heavy brushing operations.
Besides the knots open less, therefore there are ideal for the treatment of edges.

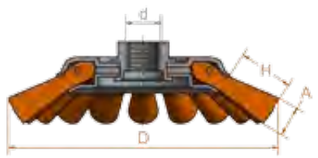

Z = number of knots

Item Nos. in bold are available ex stock.
Consider our minimum order value for *italic printed* article numbers (see page 164).

STA	= steel wire, crimped
STM	= brass coated steel wire
STH	= steel wire, high tensile, straight
ROF	= stainless steel wire, crimped
ROH	= stainless steel wire, high tensile, straight

EAN **Knot Bevel Brushes, Steel Wire, Stainless Steel Wire**

	D mm | *inch*	A mm | *inch*	d mm | *inch*	H	Z	RPM max.	Pack.	1 STH 0.35 | *0.014"* Art.-No.	1 STH 0.50 | *0.020"* Art.-No.	2 ROH 0.35 | *0.014"* Art.-No.	2 ROH 0.50 | *0.020"* Art.-No.
	100 | *4*	12 | *1/2*	M 10 x 1.5	20	18	15,000	1		**471.254**		
	100 | *4*	12 | *1/2*	M 14 x 2.0	20	18	15,000	1	**471.157***	**471.257**	**471.757***	**471.857***
	115 | *4 1/2*	12 | *1/2*	M 14 x 2.0	24	20	15,000	1	**472.157***	**472.257**	**472.757***	**472.857***
	115 | *4 1/2*	12 | *1/2*	M 14 x 2.0	24	24	15,000	1		**472.257.V4***		
	125 | *5*	12 | *1/2*	M 14 x 2.0	29	20	15,000	1		**473.257***		**473.857**
3	115 | *4 1/2*	12 | *1/2*	M 14 x 2.0	24	20	15,000	1		**472.257.WZ***		**472.857.WZ***

EAN 4 **Knot Bevel Brushes, Steel Wire, Brass coated steel wire**

D mm | *inch*	A mm | *inch*	d mm | *inch*	H	Z	RPM max.	Pack.	STM 0.35 | *0.014"* Art.-No.	STM 0.50 | *0.020"* Art.-No.
100 | *4*	12 | *1/2*	M 14 x 2.0	20	18	15,000	1	**471.157.SM***	
115 | *4 1/2*	12 | *1/2*	M 14 x 2.0	24	20	15,000	1		**472.257.SM***

EAN **Bevel Brushes, Crimped Wire**

D mm | *inch*	A mm | *inch*	d	H	RPM max.	Pack.	5 STA 0.35 | *0.014"* Art.-No.	6 ROF 0.30 | *0.012"* Art.-No.	6 STM 0.30 | *0.012"* Art.-No.
100 | *4*	10 | *3/8*	M 14 x 2.0	20	15,000	1	**422.177***	**422.367***	**422.767**

EAN 7 **Wheel Brushes, crimped wire, with thread**

D mm | *inch*	A mm | *inch*	d	H	RPM max.	Pack.	ROF 0.30 | *0.012"* Art.-No.	STM 0.30 | *0.012"* Art.-No.
115 | *4 1/2*	12 | *1/2*	M 14	24	12,500	1	*304.361.14*	**304.761.14**
125 | *5*	13 | *1/2*	M 14	19.5	12,500	1	**335.361.14**	**335.761.14**

* Packed 10 pieces per carton

Brushes for grass trimmers

Bevel Brushes

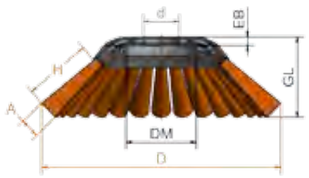

Brushes for grass trimmers
Knotted brushes or Bevel Brushes with PBT on grass trimmers are ideal for removing weeds on grass pavers, curbstones, cobbled areas or other spots which are hard to reach. Those brushes clean larger areas like courtyards, terraces or longer alleys effortless and sustainable.

Besides, brushes are ecologically friendly and they remove weeds fast and effectively.

In sensitive areas such as agriculture synthetic filaments are a decisive criterion. Synthetic bristles are soft and therefore ideally suited for sensitive surfaces, as they do not scratch. The brush with synthetic bristles is ideal for grass trimmers with battery due to its lighter weight and scores with a longer service life and even wear.

Right adaption of the brush

Attention: When working with brushes on grass trimmers, please be aware of stringent safety rules. Please take note of the data sheet we attach the brushes or have a look at www.lessmann.com.

Wheel Brushes

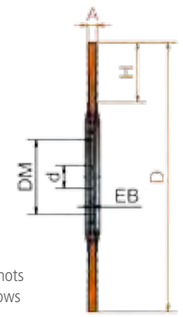

ZF = Knot type
Z = number of knots
R = number of rows

Item Nos. in bold are available ex stock.
Consider our minimum order value for *italic printed* article numbers (see page 164).

STM = brass coated steel, straight
STH = steel wire, high tensile, straight
PBT = Polyester PBT

You can find our **tutorials** here: www.lessmann.com/index.php/en/content/view/full/711

EAN

Knotted Bevel Brushes, for grass trimmers

	D mm | *inch*	A mm | *inch*	EB	DM	H mm | *inch*	GL	Z	d mm | *inch*	ZF	RPM max.	Pack.	**STH 0.50** | *0.020"* Art.-No.	**STM 0.50** | *0.020"* Art.-No.
1	170 | *6 3/4*	12 | *1/2*	6	50	50 | *2*	58	32	20 | *3/4*	B	10,000	1	**475.250.01**	
1	170 | *6 3/4*	12 | *1/2*	6	50	50 | *2*	58	32	25.4 | *1*	B	10,000	1	**475.251.01**	
2	200 | *8*	14 | *9/16*	6	64	37 | *1 1/2*	55	36	20 | *3/4*	B	10,000	1	**476.250.01**	**476.250.SM**
2	200 | *8*	14 | *9/16*	6	64	37 | *1 1/2*	55	36	25.4 | *1*	B	10,000	1	**476.251.01**	**476.251.SM**

The brushes are suitable for all common grass trimmer and brush cutter models. Possible special diameters or special bores are deliverable on demand.

EAN

Knotted Wheel Brushes, for grass trimmers

	D mm | *inch*	A mm | *inch*	EB	DM	H mm | *inch*	Z	d mm | *inch*	ZF	RPM max.	Pack.	**STH 0.50** | *0.020"* Art.-No.
3	175 | *6 7/8*	6 | *1/4*	8	68	34 | *1 1/4*	40	20 | *3/4*	B	12,500	1	**475.260.01**
3	175 | *6 7/8*	6 | *1/4*	6	68	34 | *1 1/4*	40	25.4 | *1*	B	12,500	1	**475.261.01**
3	200 | *8*	6 | *1/4*	8	68	46 | *1 49/64*	40	20 | *3/4*	B	12,500	1	**476.260.01**
3	200 | *8*	6 | *1/4*	6	68	46 | *1 49/64*	40	25.4 | *1*	B	12,500	1	**476.261.01**
4	250 | *10*	6 | *1/4*	3	83	42 | *1 5/8*	56	20 | *3/4*	B	10,000	1	**477.260.01**
4	250 | *10*	6 | *1/4*	3	83	42 | *1 5/8*	56	25.4 | *1*	B	10,000	1	**477.261.01**
4	300 | *12*	6 | *1/4*	3	83	67 | *2 5/8*	56	20 | *3/4*	B	10,000	1	**478.260.01**
4	300 | *12*	6 | *1/4*	3	83	67 | *2 5/8*	56	25.4 | *1*	B	10,000	1	**478.261.01**

EAN

Bevel Brushes, for grass trimmers, PBT

	D mm | *inch*	A mm | *inch*	EB	DM	H mm | *inch*	d mm | *inch*	RPM max.	Pack.	**PBT** Art.-Nr.
5	160 | *6 1/4*	10 | *25/64*	3.5	50	65 | *2 1/4*	20 | *3/4*	10.000	1	**425.000.01**
5	160 | *6 1/4*	10 | *25/64*	3.5	50	65 | *2 1/4*	25.4 | *1*	10.000	1	**425.001.01**
5	230 | *9 3/16*	25 | *1*	5	80	70 | *2 3/4*	20 | *3/4*	10.000	1	**426.000.01**
5	230 | *9 3/16*	25 | *1*	5	80	70 | *2 3/4*	25.4 | *1*	10.000	1	**426.001.01**

Low sparking brushes

Low sparking brushes
are recommended for the working in areas where flammable steams, liquids or dusts are a part of the working conditions. Also, they are used in all other situations where sparks could lead to a potential fire or explosion hazard.

In explosion-proof areas, low sparking brushes are recommended. In comparison to the wooden handles of the hand brushes, the bodies of machine driven brushes are made of brass. The filling material is bronze CuSn6. These materials generate a low amount of sparks, which ensures a working environment with the minimum of sparks.

Another benefit of bronze is, its corrosion resistant properties

Typical application areas
Low sparking brushes are used in all industries and companies which have explosion risks or fire hazard due to flying sparks. e.g.:
- Oil and gas industry
- Pipeline industry
- Chemical industry
- Nuclear power plants
- Plastics industry
- Food industry, e.g.: bakeries
- And many others

For example cleaning tanks or working in an explosive environment.

Work instructions
- Low sparking brushes (with bronze filling) are a lot softer than other regularly used fill materials e.g. Steel and Stainless Steel
- Therefore these brushes have a higher abrasion rate, this means these brushes have to be used with more carefully so as not to damage the workpiece.

Item Nos. in bold are available ex stock.
Consider our minimum order value for *italic printed* article numbers (see page 164).

BRO = bronze wire

- Overuse is to be avoided.
- The use of low-sparking tools has to be not your only protection measure against fire or explosions.
- To ensure a comprehensive protection of staff and building please respect the given provisions of the different institutions, e.g.: provisions of trade associations, employers or legislators.

1 Handbrushes standard; KL 290

Rows	H mm | *inch*	Pack.	BRO 0.20/BRO 0.40* Art.-No.
3	25 | *1*	12	**108.331**
4	25 | *1*	12	**108.341**
5	25 | *1*	12	**108.351**
4	25 | *1*	12	*108.041**

2 Handbrushes export model; KL 350

Rows	H mm | *inch*	Pack.	BRO 0.30 Art.-No.
3	30 | *1 3/16*	6	**122.771**
4	30 | *1 3/16*	6	**122.821**
5	30 | *1 3/16*	6	*122.871*

3 Dusters; KL320

Rows	H mm | *inch*	Pack.	BRO 0.25 Art.-No.
4	40 | *1 5/8*	12	*124.181*

4 Spark Plug Brushes; KL 200

Rows	H mm | *inch*	Pack.	BRO 0.15 Art.-No.
3	15 | *19/32*	12	**132.801**

5 Brooms and scrubs

Rows	KL mm | *inch*	KB mm | *inch*	H mm | *inch*	Pack.	BRO 0.40 Art.-No.
6	300 | *12*	70 | *2 3/4*	55 | *2 11/64*	12	*146.270*
6	220 | *8 5/8*	60 | *2 3/8*	40 | *1 5/8*	12	*148.170*

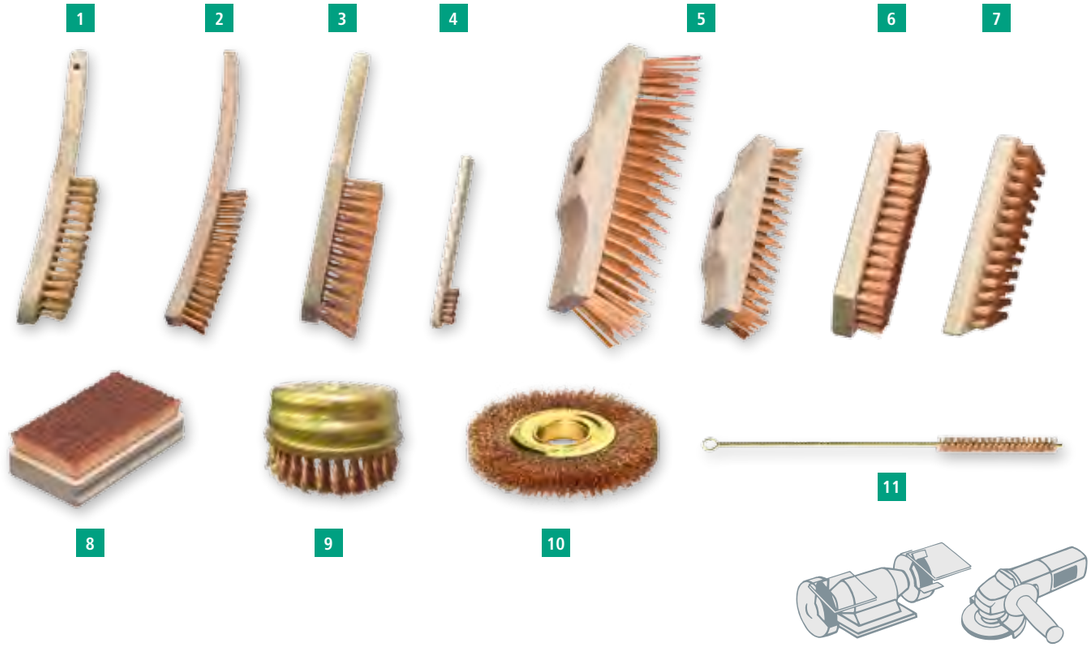

Special models

	Rows	KL mm | *inch*	KB mm | *inch*	A mm | *inch*	H mm | *inch*	Pack.	BRO 0.15 crimped Art.-No.	BRO 0.08 crimped Art.-No.
6	7	150 | *6*	50 | *2*	140 | *5 533/64*	20 | *51/64*	12	**144.011**	
	6	180 | *7 3/32*	60 | *2 3/8*	170 | *6 11/16*	20 | *51/64*	12	**144.111**	
	6	150 | *6*	50 | *2*	130 | *15 1/8*	15 | *19/32*	12	**144.311**	
7	6	180 | *7 3/32*	60 | *2 3/8*	160 | *6 19/64*	20 | *51/64*	12	**144.411**	
8	11	120 | *4 23/32*	70 | *2 3/4*	110 | *4 21/64*	14 | *9/16*	4		**152.811**

Cup Brushes

	D mm | *inch*	H mm | *inch*	H1 mm | *inch*	Z	RPM max.	Cup	Pack.	BRO 0.50 knotted Art.-No.
9	125 | *5*	23 | *29/32*	15 | *19/32*	32	7,000	brass	1	*487.011.MS*

Wheel Brushes

	D mm | *inch*	A mm | *inch*	EB mm | *inch*	R mm | *inch*	H mm | *inch*	d. Stand	d. min./max.	RPM	Pack.	BRO 0.30 crimped Art.-No.
10	150 | *6*	23-25 | *7/8-1*	22 | *7/8*	50 | *2*	33 | *1 19/64*	Set 3	13-50	6,000	1	*345.662.MS*

Cylinder Brushes; GL330

	D mm | *inch*	A mm | *inch*	drilling wire	Pack.	BRO 0.20 Art.-No.
11	10 | *25/64*	100 | *4*	**MES 2.5**	10	**542.034**
	20 | *51/64*	100 | *4*	**MES 2.5**	10	**543.006**
	35 | *1 3/8*	100 | *4*	**MES 3.0**	10	**543.926**

GL = total length
KL = body length

LESSMANN®
THE GERMAN BRUSH COMPANY

BRUSHES WITH SHANK

LESSMANN

Wheel Brushes with Shank

Wheel Brushes with Shank
The wheel brushes shown on these pages are manufactured with a mounted shank for professional use. Tight filling wire and balanced running make these brushes excellent tools.

Knotted Wheel Brushes with Shank
It does not matter if the brush has one or two rows, the brush is the prefect tool for removing underseal, rust deburring, roughening etc. For working in narrow places we recommend our brush 417.198.11, which is an especially narrow Brush.

Encapsulated Brushes
By embedding in tough plastic the filling width always remains the same and early break of the wires can be prevented. It's the perfect tool for long lasting and safe working. The colour on the picture can differ from the colour on the brush.

Wheel brushes with shank completely stainless steel
All the inner and outer parts of these brushes such as shanks, side plates, rings, etc. are made of stainless steel. Therefore these brushes are the perfect tool for working in damp and difficult places. These brushes do not have green side plates.

Structuring Brushes with Shank
These brushes are special brushes which can be used for wood grain surfaces.

Shank Brushes with Silicon Carbide Bristles
The high quality bristles with silicon carbide can be used for deburring, polishing and structuring of stainless steel, aluminium and plastic surfaces. Besides the articles mentioned on this page we can also supply other grits, diameters and widths.

Stainless Steel Brushes
LESSMANN brushes with stainless steel wire have green site plates. We use wire with material number 1.4310. Material number 1.4401. can be used on request.
More information for brush applications on stainless materials you will find at www.lessmann.com

The brushes have a 6 mm shank. On demand the brushes can also be supplied with 1/4" shanks (USA execution).

Brushes with other diameters, filling widths and filling material are available on request.

You can find our **tutorials** here: www.lessmann.com/index.php/en/content/view/full/711

You can find our **Enquiry Forms** in the respecitve category under: www.lessmann.com/index.php/en/content/view/full/61
or in the catalog from page 158

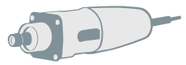

Knot Wheel Brushes with Shank Ø 6 mm

	D mm | *inch*	A mm | *inch*	H mm | *inch*	Z	ZF	R	RPM max.	Pack.	**STH 0.35** | *0.014"* Art.-No.	**STH 0.50** | *0.020"* Art.-No.	**ROH 0.50** | *0.020"* Art.-No.
1	75 | *3*	9 | *3/8*	15 | *5/8*	18	D	1	25,000	10		**417.198.11**	
1	75 | *3*	12 | *1/2*	15 | *5/8*	18	B	1	25,000	10	**417.168**	**417.198**	**417.398**
2	75 | *3*	16 | *5/8*	15 | *5/8*	18	B	2	25,000	10		**417.199**	**417.399**

Wheel Brushes with Shank Ø 6 mm, Encapsulated

	D mm | *inch*	A mm | *inch*	H mm | *inch*	RPM max.	Pack.	**STA 0.30** | *0.012"* Art.-No.
3	50 | *2*	8 | *5/16*	13 | *1/2*	15,000	10	**415.160**
3	60 | *2 3/8*	8 | *5/16*	18 | *3/4*	15,000	10	**416.160**
3	76 | *3*	8 | *5/16*	23 | *7/8*	15,000	10	**417.160**

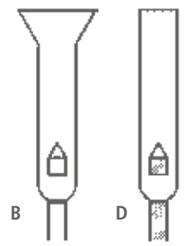

Knot types ZF

B: Rose Bud
D: Fully knotted
(wire ends are cut completely)

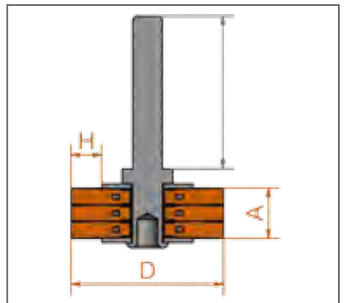

Z = number of knots, R = number of rows

Item Nos. in bold are available ex stock.
Consider our minimum order value for *italic printed* article numbers (see page 164).

STA = steel wire, crimped
STH = steel wire, high tensile, straight
ROH = stainless steel wire, high tensile

Wheel Brushes with Shank

1 2

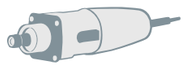

Wheel Brushes with Shank Ø 6 mm, Steel Wire

D mm | *inch*	A mm | *inch*	H mm | *inch*	RPM max.	Pack.	1 | 2 **STA 0.15** | *0.006"* Art.-No.	**STA 0.20** | *0.008"* Art.-No.	**STA 0.30** | *0.012"* Art.-No.	**STA 0.50** | *0.020"* Art.-No.
20 | *51/64*	6 | 15/64	3 | *1/8*	20,000	10	*411.132*	**411.142**		
30 | *1 3/16*	6 | 15/64	6 | *15/64*	20,000	10	**413.132**	**413.142**	**413.162**	
30 | *1 3/16*	9 | 23/64	6 | *15/64*	20,000	10	*413.133*	**413.143**	**413.163**	
40 | *1 3/8*	9 | 23/64	9 | *23/64*	18,000	10	**414.132**	**414.142**	**414.162**	**414.192**
40 | *1 3/8*	12 | 15/32	9 | *23/64*	18,000	10	*414.133*	**414.143**	**414.163**	*414.193*
50 | *2*	11 | 7/16	12 | *15/32*	15,000	10	*415.132*	**415.142**	**415.162**	**415.192**
50 | *2*	15 | 19/32	12 | *15/32*	15,000	10	**415.133**	**415.143**	**415.163**	*415.193*
60 | *2 3/8*	13 | 33/64	17 | *43/64*	15,000	10	*416.132*	**416.142**	**416.162**	available on demand
60 | *2 3/8*	18 | 45/64	17 | *43/64*	15,000	10	**416.133**	**416.143**	**416.163**	*416.193*
70 | *2 3/4*	9 | 23/64	19 | *3/4*	15,000	10	*417.132*	**417.142**	**417.162**	**417.192**
70 | *2 3/4*	13 | 33/64	19 | *3/4*	15,000	10	**417.133**	**417.143**	**417.163**	available on demand
80 | *3 1/4*	9 | 23/64	20 | *51/64*	15,000	10	available on demand	**418.142**	**418.162**	*418.192*
80 | *3 1/4*	13 | 33/64	20 | *51/64*	15,000	10	available on demand	**418.143**	**418.163**	available on demand
100 | *4*	14 | 9/16	25 | *1*	12,000	10		**41Z.143**	**41Z.163**	
100 | *4*	19 | 3/4	25 | *1*	12,000	10		**41Z.144**	**41Z.164**	

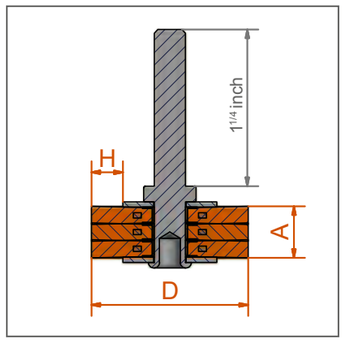

Item Nos. in bold are available ex stock.
Consider our minimum order value for *italic printed* article numbers (see page 164).

STA = steel wire, crimped
ROF = stainless steel wire, crimped
RO4 = stainless steel wire, straight, 1.4401

1 2

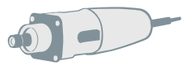

Wheel Brushes with Shank Ø 6 mm, Stainless Steel

D mm | *inch*	A mm | *inch*	H mm | *inch*	RPM max.	Pack.	1 **ROF 0.20** | *0.008"* Art.-No.	**ROF 0.30** | *0.012"* Art.-No.	**RO4 0.30** | *0.012"* Art.-No.
20 | *51/64*	6 | *15/64*	3 | *1/8*	20,000	10	**411.342**		
30 | *1 3/16*	6 | *15/64*	6 | *15/64*	20,000	10	**413.342**	*413.362*	
30 | *1 3/16*	9 | *23/64*	6 | *15/64*	20,000	10	**413.343**	*413.363*	
40 | *1 3/8*	9 | *23/64*	9 | *23/64*	18,000	10	**414.342**	**414.362**	**414.462**
40 | *1 3/8*	12 | *15/32*	9 | *23/64*	18,000	10	**414.343**	available on demand	
50 | *2*	11 | *7/16*	12 | *15/32*	15,000	10	**415.342**	**415.362**	**415.462**
50 | *2*	15 | *19/32*	12 | *15/32*	15,000	10	**415.343**	**415.363**	
60 | *2 3/8*	13 | *33/64*	17 | *43/64*	15,000	10	**416.342**	**416.362**	**416.462**
60 | *2 3/8*	18 | *45/64*	17 | *43/64*	15,000	10	**416.343**	**416.363**	
70 | *2 3/4*	9 | *23/64*	19 | *3/4*	15,000	10	**417.342**	**417.362**	**417.462**
70 | *2 3/4*	13 | *33/64*	19 | *3/4*	15,000	10	**417.343**	**417.363**	
80 | *3 1/4*	9 | *23/64*	20 | *51/64*	15,000	10	**418.342**	**418.362**	**418.462**
80 | *3 1/4*	13 | *33/64*	20 | *51/64*	15,000	10	**418.343**	**418.363**	
100 | *4*	14 | *9/16*	25 | *1*	12,000	10	**41Z.343**	**41Z.363**	
100 | *4*	19 | *3/4*	25 | *1*	12,000	10	**41Z.344**	**41Z.364**	

2 Wheel Brushes with Shank Ø 6 mm, Completely Stainless

D mm | *inch*	A mm | *inch*	H mm | *inch*	RPM max.	Pack.	**ROF 0.20** | *0.008"* Art.-No.	**ROF 0.30** | *0.012"* Art.-No.
50 | *2*	15 | *19/32*	12 | *15/32*	15,000	10	**415.301**	**415.302**
60 | *2 3/8*	17 | *43/64*	17 | *43/64*	15,000	10	**416.303**	*416.302*
70 | *2 3/4*	18 | *45/64*	19 | *3/4*	15,000	10	**417.306**	**417.309**

Wheel Brushes with Shank

1

2

3

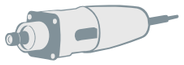

1 Wheel Brushes with Shank Ø 6 mm, brass coated steel wire

D mm | *inch*	A mm | *inch*	H mm | *inch*	RPM max.	Pack.	**STM 0.25** | *0.010"* Art.-No.
40 | *1 3/8*	9 | *23/64*	9 | *23/64*	18,000	10	*414.752*
50 | *2*	11 | *7/16*	12 | *15/32*	15,000	10	**415.752**
50 | *2*	15 | *19/32*	12 | *15/32*	15,000	10	*415.753*
60 | *2 3/8*	13 | *33/64*	17 | *43/64*	15,000	10	*416.752*
70 | *2 3/4*	9 | *23/64*	19 | *3/4*	15,000	10	**417.752**
80 | *3 1/4*	9 | *23/64*	20 | *51/64*	15,000	10	*418.752*

2 Body Brushes with Shank Ø 6 mm

D mm | *inch*	A	H	RPM max.	Pack.	**STM 0.15** | *0.006"* Art.-No.	**STM 0.20** | *0.008"* Art.-No.
26 | 1	3 | *1/8*	4 | *5/32*	20.000	10	**412.731**	
50 | 2	3 | *1/8*	10 | *25/64*	15.000	10		**415.741**

Structuring Brushes with Shank Ø 8 mm

D mm | *inch*	A	H	RPM max.	Pack.	3 **STM 0.25** | *0.010"* Art.-No.	**SIC 80/1.4** Art.-No.
80 | *3 1/4*	35 | *1 3/8*	28 | *1 7/64*	4,500	1	**418.704**	*418.803*

Item Nos. in bold are available ex stock.
Consider our minimum order value for *italic printed* article numbers (see page 164).

STM = brass coated steel, crimped
MES = brass wire, crimped
SIC = silicon carbide bristles

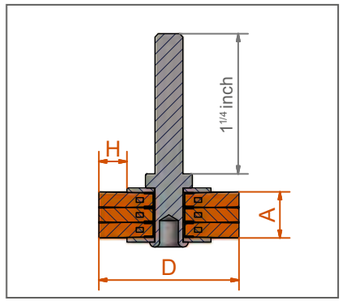

1

2

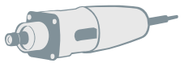

1 Wheel Brushes with Shank Ø 6 mm, Brass Wire

D mm | *inch*	A mm | *inch*	H mm | *inch*	RPM max.	Pack.	**MES 0.20** | *0.008"* Art.-No.
20 | *51/64*	5 | *13/64*	3 | *1/8*	20,000	10	**411.542**
30 | *1 3/16*	5 | *13/64*	6 | *1/4*	20,000	10	**413.542**
30 | *1 3/16*	8 | *5/16*	6 | *1/4*	20,000	10	*413.543*
40 | *1 3/8*	7 | *9/32*	9 | *3/8*	18,000	10	**414.542**
40 | *1 3/8*	10 | *25/64*	9 | *3/8*	18,000	10	*414.543*
50 | *2*	10 | *25/64*	12 | *15/32*	15,000	10	**415.542**
50 | *2*	14 | *9/16*	12 | *15/32*	15,000	10	**415.543**
60 | *2 3/8*	12 | *15/32*	17 | *43/64*	15,000	10	**416.542**
60 | *2 3/8*	16 | *5/8*	17 | *43/64*	15,000	10	**416.543**
70 | *2 3/4*	8 | *5/16*	19 | *3/4*	15,000	10	**417.542**
70 | *2 3/4*	12 | *15/32*	19 | *3/4*	15,000	10	**417.543**
80 | *3 1/4*	14 | *9/16*	20 | *51/64*	15,000	10	**418.542**
80 | *3 1/4*	19 | *3/4*	20 | *51/64*	15,000	10	**418.543**

2 Wheel Brushes with Shank Ø 6 mm, Silicon Carbide Bristles

D mm | *inch*	A mm | *inch*	H mm | *inch*	RPM max.	Pack.	**SIC 120/0.6** Art.-No.	**SIC 120/1.1** Art.-No.	**SIC 180/1.0** Art.-No.	**SIC 320/0.6** Art.-No.
30 | *1 3/16*	6 | *15/64*	6 | *15/64*	20,000	10	**413.841**			**413.871**
40 | *1 3/8*	15 | *19/32*	12 | *15/32*	15,000	10		**414.842**		**414.872**
50 | *2*	10 | *25/64*	12 | *15/32*	15,000	10		**415.842**	*415.852*	**415.872**
60 | *2 3/8*	10 | *25/64*	14 | *9/16*	15,000	10		*416.842*	*416.852*	*416.872*
70 | *2 3/4*	10 | *25/64*	20 | *51/64*	15,000	10		**417.842**	**417.852**	**417.872**
80 | *3 1/4*	12 | *15/32*	22 | *7/8*	15,000	10		**418.842**	*418.852*	**418.872**

Cup Shank Brushes

Cup Brushes with Shank
Ideal for working on medium and large areas.

Cup Shank Brushes with Plastic Cup
Cup Shank Brushes with Plastic Cup and stainless steel wire especially are used for applications on stainless steel materials.
The plastic cup prevents contact with the working piece, therefore it protects from corrosion or other foreign particles.

Bevel Brushes with Shank
Due to the conical form these universal tools are ideal for notches, corners, grooves, inside edges and irregular surfaces. These professional brushes are suitable for drills and cordless screwdrivers as well for high-speed straight grinders and compressed-air drives.

Brushes with steel and stainless steel wire can be used at higher RPM and can therefore be used on electrical and air driven grinding machines. These models are known for their high density of filling material and therefore they have a very long lifetime.

The brushes with silicon carbide bristles can be used for deburring, polishing or structuring of stainless steel, aluminium and plastic surfaces.

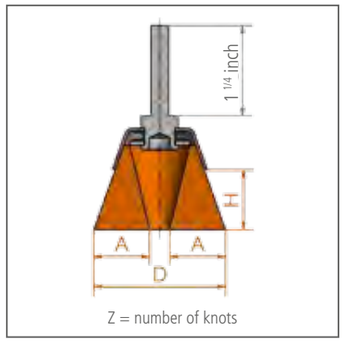

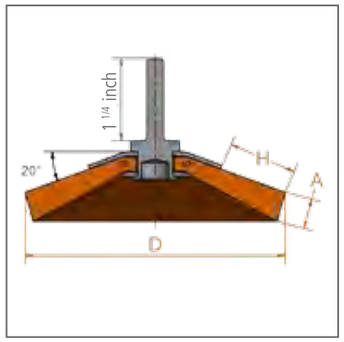

Item Nos. in bold are available ex stock.
Consider our minimum order value for *italic printed* article numbers (see page 164).

STA = steel wire, crimped
STH = steel wire, high tensile, straight
ROF = stainless steel wire, crimped
MES = brass wire, crimped
SIC = silicon carbide bristles

Cup Brushes with Shank Ø 6 mm

D mm | *inch*	A mm | *inch*	H mm | *inch*	RPM max.	Pack.	1 STA 0.20 | *0.008"* Art.-No.	1 STA 0.30 | *0.012"* Art.-No.	1 ROF 0.20 | *0.008"* Art.-No.	1 ROF 0.30 | *0.012"* Art.-No.	2 MES 0.20 | *0.008"* Art.-No.	2 MES 0.30 | *0.012"* Art.-No.
40 | *1 3/8*	15 | *5/8*	20 | *3/4*	10,500	10	**434.142**	**434.162**	*434.342*	**434.362**	**434.542**	
50 | *2*	22 | *7/8*	20 | *3/4*	10,500	10	**435.142**	**435.162**	*435.342*	**435.362**	**435.542**	**435.562**
60 | *2 3/8*	25 | *1*	25 | *1*	8,000	10	available on demand	**436.162**	available on demand	**436.362**	available on demand	
70 | *2 3/4*	30 | *1 1/4*	25 | *1*	6,000	10	**437.142**	**437.162**	*437.342*	**437.362**	**437.542**	

3 Cup Brushes with Shank Ø 6 mm and plastic cup

D mm | *inch*	A mm | *inch*	H mm | *inch*	RPM max.	Pack.	ROF 0.20 | *0.008"* Art.-No.	ROF 0.25 | *0.010"* Art.-No.	ROF 0.30 | *0.012"* Art.-No.
40 | *1 3/8*	20 | *3/4*	30 | *1 1/4*	15,000	10	**434.345**	**434.355**	**434.365**
50 | *2*	25 | *1*	28 | *1 7/64*	10,500	10	**435.345**	**435.355**	**435.365**

4 Cup Brushes with Shank Ø 6 mm, Silicon Carbide Bristles

D mm | *inch*	A mm | *inch*	H mm | *inch*	RPM max.	Pack.	SIC 80/1.2 Art.-No.	SIC 320/0.6 Art.-No.
50 | *2*	10 | *3/8*	20 | *3/4*	4,500	10	**430.128**	**430.129**
75 | *3*	15 | *5/8*	22 | *7/8*	4,500	10	**430.138**	**430.139**

5 Knot Cup Brushes with Shank Ø 6 mm, Steel Wire

D mm | *inch*	H mm | *inch*	Z mm | *inch*	RPM max.	Pack.	STH 0.50 | *0.020"* Art.-No.
75 | *3*	20 | *3/4*	18 | *3/4*	8,500	10	**483.230**

6 Bevel Brushes with Shank Ø 6 mm

D mm | *inch*	A mm | *inch*	H mm | *inch*	RPM max.	Pack.	STA 0.30 Art.-No.	ROF 0.30 Art.-No.
70 | *2 3/4*	10 | *3/8*	15 | *5/8*	15,000	10	**4K7.161**	**4K7.361**
90 | *3 3/4*	10 | *3/8*	25 | *1*	12,000	10	**4K9.161**	**4K9.361**

End Brushes

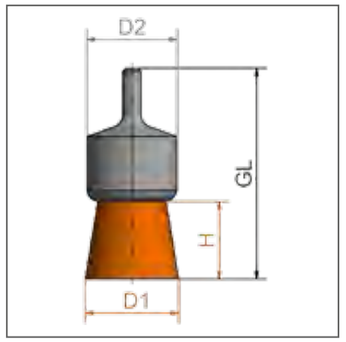

Item Nos. in bold are available ex stock.
Consider our minimum order value for *italic printed* article numbers (see page 164).

STA	= steel wire, crimped
STH	= steel wire, high tensile, straight
ROF	= stainless steel wire, crimped
SIC	= silicon carbide bristles

End Brushes with Shank
For cleaning and deburring in hard to reach areas, removal of paint, rubber excess, cleaning of moulds and castings. Also for working on edges and curves, and in the inside of the bores, etc. End brushes are also available in other shapes, spreaded or pointed.

These brushes are perfect for fast moving tools. On demand also with 1/4" shank available.

Special End Brushes, crimping
The special end brushes with narrow crimped wire are characterized by its dense filling. These brushes show a harder brushing effect than brushes with normal crimped wire. These brushes are also available with extra long shanks or different diameters.

Square End Brushes
This special tool enables e. g. cleaning of blind holes and processing of bottom and side surfaces in one step.
It's perfect for cleaning and easy deburring applications, e. g. square bores. Other diameters available on demand.

Encapsulated Brushes
By embedding in tough plastic the filling width always remains the same and early break of the wires can be prevented. It's the perfect tool for long lasting and safe working. The advantages when working with encapsulated brushes are longer lifetime and harder brush effect. However, it might be possible that the brush will leave marks on the work piece.

Stainlessless Steel Brushes
Further information for brushing on stainless steel you will find on www.lessmann.com

Special Design
For your order please state your requirements regarding the measures and wires.

Special End Brushes with Shank Ø 6 mm, narrow crimping

	D1 mm | *inch*	D2 mm | *inch*	H mm | *inch*	GL mm | *inch*	RPM max.	Pack.	**STH 0.35** | *0.014"* Art.-No.	**STH 0.50** | *0.020"* Art.-No.
1	11 | *7/16*	12 | *1/2*	25 | *1*	71 | *2 3/4*	12,000	10	**466.171**	available on demand
2	11 | *7/16*	12 | *1/2*	25 | *1*	71 | *2 3/4*	12,000	10	**466.172***	available on demand*
1	19 | *3/4*	22 | *7/8*	29 | *1 1/8*	72 | *2 3/4*	12,000	10	*460.121*	available on demand
2	19 | *3/4*	22 | *7/8*	29 | *1 1/8*	72 | *2 3/4*	12,000	10	*460.122**	available on demand*

3 Square End Brushes with Shank Ø 6 mm

D1 mm | *inch*	A mm | *inch*	GL mm | *inch*	RPM max.	Pack.	**STA 0.15** | *0.006"* Art.-No.	**STA 0.25** | *0.010"* Art.-No.	**ROF 0.30** | *0.012"* Art.-No.
25.4 | *1*	8 | *5/16*	100 | *4*	4,500	10	*469.131*	*469.151*	*469.362*
31.8 | *1 1/4*	8 | *5/16*	100 | *4*	4,500	10	*469.133*	*469.153*	available on demand
38.1 | *1 1/2*	8 | *5/16*	100 | *4*	4,500	10	available on demand	available on demand	available on demand
50.8 | *2*	8 | *5/16*	100 | *4*	4,500	10	available on demand	available on demand	available on demand

4 End Brushes with Shank Ø 6 mm, Encapsulated

D1 mm | *inch*	D2 mm | *inch*	H mm | *inch*	GL mm | *inch*	RPM max.	Pack.	**STA 0.30** | *0.012"* Art.-No.
10 | *3/8*	10 | *3/8*	20 | *3/4*	65 | *2 1/2*	15,000	10	**451.160**
16 | *5/8*	16 | *5/8*	25 | *1*	72 | *2 7/8*	15,000	10	**452.160**
22 | *7/8*	22 | *7/8*	25 | *1*	72 | *2 7/8*	15,000	10	**453.160**
28 | *1 1/8*	28 | *1 7/64*	30 | *1 1/4*	75 | *3*	10,000	10	**456.160**

5 End Brushes with Shank Ø 6 mm, Silicon Carbide Bristles

D1 mm | *inch*	D2 mm | *inch*	H mm | *inch*	GL mm | *inch*	RPM max.	Pack.	**SIC 120/1.1** Art.-No.	**SIC 180/1.0** Art.-No.	**SIC 320/0.6** Art.-No.
12 | *1/2*	10 | *3/8*	20 | *3/4*	60 | *2 3/8*	20,000	10	**451.831**	*451.851*	*451.871*
17 | *5/8*	16 | *5/8*	22 | *7/8*	68 | *2 3/4*	20,000	10	**452.831**	*452.851*	available on demand
23 | *7/8*	22 | *7/8*	25 | *1*	70 | *2 3/4*	10,000	10	*454.831*	**454.851**	**454.871**
30 | *1 1/4*	28 | *1*	30 | *1 1/4*	75 | *3*	10,000	10	*456.831*	**456.851**	**456.871**

* pointed

End Brushes

End Brushes with Shank Ø 6 mm, Steel Wire

	D1 mm | *inch*	D2 mm | *inch*	H mm | *inch*	GL mm | *inch*	RPM max.	Pack.	Shape	**STA 0.15** | *0.006"* Art.-No.	**STA 0.20** | *0.008"* Art.-No.	**STA 0.30** | *0.012"* Art.-No.	**STA 0.50** | *0.020"* Art.-No.
1	12 | *1/2*	10 | *3/8*	20 | *3/4*	60 | *2 3/8*	20,000	10		**451.131**	**451.141**	**451.161**	**451.191**
2	12 | *1/2*	10 | *3/8*	20 | *3/4*	60 | *2 3/8*	20,000	10				**451.162***	*451.192**
3	12 | *1/2*	10 | *3/8*	20 | *3/4*	120 | *4 3/4*	15,000	10		**458.131**	**458.141**	**458.161**	**458.191**
4	17 | *5/8*	16 | *5/8*	22 | *7/8*	65 | *2 1/2*	20,000	10		*452.131*	**452.141**	**452.161**	**452.191**
5	23 | *7/8*	22 | *7/8*	25 | *1*	68 | *2 3/4*	18,000	10		**453.131**	**453.141**	**453.161**	**453.191**
	30 | *1 1/4*	29 | *1 1/8*	25 | *1*	68 | *2 3/4*	18,000	10		**456.131**	**456.141**	**456.161**	**456.191**
	50 | *2*	22 | *7/8*	18 | *3/4*	68 | *2 3/4*	18,000	10				**453.163****	
6	70 | *2 3/4*	29 | *1 1/8*	25 | *1*	68 | *2 3/4*	18,000	10				**456.163****	

End Brushes with Shank Ø 6 mm, Brassed Steel Wire, Cord Wire

D1 mm | *inch*	D2 mm | *inch*	H mm | *inch*	GL mm | *inch*	RPM max.	Pack.	Shape	7 **STM 0.25** | *0.010"* Art.-No.	8 **STL 0.175** | *0.007"* Art.-No.	8 **STL 0.22** | *0.009"* Art.-No.
17 | *5/8*	16 | *5/8*	22 | *7/8*	65 | *2 1/2*	20,000	10		**452.751**	*452.703*	*452.705*
23 | *7/8*	22 | *7/8*	25 | *1*	68 | *2 3/4*	18,000	10		**453.751**	*453.703*	*453.705*
30 | *1 1/4*	29 | *1 1/8*	25 | *1*	68 | *2 3/4*	18,000	10		*456.751*	*456.703*	*456.705*

9 End Brushes with Shank Ø 6 mm, Steel Wire high tensile, dense version, longer lifetime

D1 mm | *inch*	D2 mm | *inch*	H mm | *inch*	GL mm | *inch*	RPM max.	Pack.	Shape	**STH 0.30** | *0.012"* Art.-No.
12 | *1/2*	12 | *1/2*	20 | *3/4*	66 | *2 1/2*	20,000	10		**451.261.BD**
17 | *5/8*	16 | *5/8*	22 | *7/8*	65 | *2 1/2*	20,000	10		**452.261.BD**
23 | *7/8*	22 | *7/8*	25 | *1*	68 | *2 3/4*	18,000	10		**453.261.BD**
30 | *1 1/4*	29 | *1 1/8*	25 | *1*	68 | *2 3/4*	18,000	10		**456.261.BD**

End Brushes with Shank Ø 6 mm, Stainless Steel and Brass Wire

	D1 mm | *inch*	D2 mm | *inch*	H mm | *inch*	GL mm | *inch*	RPM max.	Pack.	Shape	**ROF 0.20** | *0.008"* Art.-No.	**ROF 0.30** | *0.012"* Art.-No.	7 **MES 0.20** | *0.008"* Art.-No.	7 **MES 0.30** | *0.012"* Art.-No.
1	12 | *1/2*	10 | *3/8*	20 | *3/4*	60 | *2 3/8*	20,000	10		**451.341**	**451.361**	**451.541**	**451.561**
2	12 | *1/2*	10 | *3/8*	20 | *3/4*	60 | *2 3/8*	20,000	10			**451.362**	*451.542*	*451.562*
3	12 | *1/2*	10 | *3/8*	20 | *3/4*	120 | *4 3/4*	15,000	10		**458.341**	**458.361**	**458.541**	**458.561**
4	17 | *5/8*	16 | *5/8*	22 | *7/8*	65 | *2 1/2*	20,000	10		**452.341**	**452.361**	**452.541**	**452.561**
	23 | *7/8*	22 | *7/8*	25 | *1*	68 | *2 3/4*	18,000	10		**453.341**	**453.361**	**453.541**	**453.561**
5	30 | *1 1/4*	29 | *1 1/8*	25 | *1*	68 | *2 3/4*	18,000	10		**456.341**	**456.361**	**456.541**	**456.561**
6	50 | *2*	22 | *7/8*	18 | *3/4*	68 | *2 3/4*	18,000	10			**453.363**		

End Brushes with Shank Ø 6 mm, complete Stainless Steel

D1 mm | *inch*	D2 mm | *inch*	H mm | *inch*	GL mm | *inch*	RPM max.	Pack.	Shape	**ROF 0.30** | *0.012"* Art.-No.
12 | *1/2*	10 | *3/8*	20 | *3/4*	60 | *2 3/8*	20,000	10		**451.305**
17 | *5/8*	16 | *5/8*	22 | *7/8*	65 | *2 1/2*	20,000	10		**452.304**
23 | *7/8*	22 | *7/8*	25 | *1*	68 | *2 3/4*	18,000	10		**453.301**

Brushes also available with plastic cover.

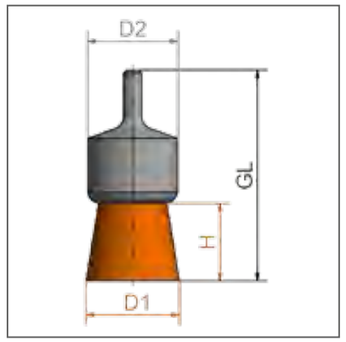

Item Nos. in bold are available ex stock.
Consider our minimum order value for *italic printed* article numbers (see page 164).

STA = steel wire, crimped
STH = steel wire, high tensile, crimped
STM = brass coated steel, crimped
STL = cord wire, crimped
ROF = stainless steel wire, crimped
MES = brass wire, crimped

Knot End Brushes

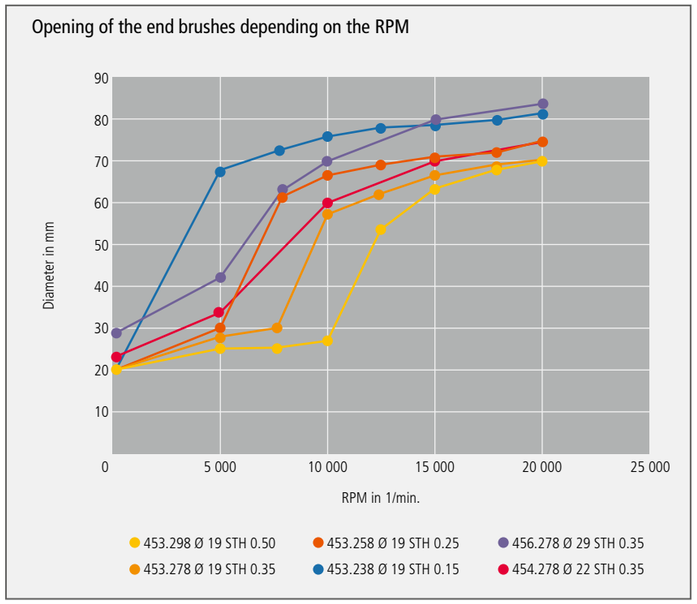

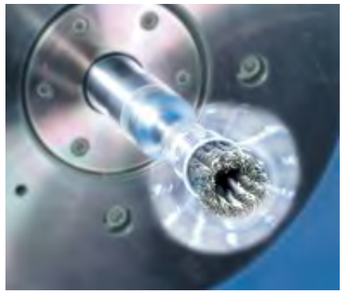

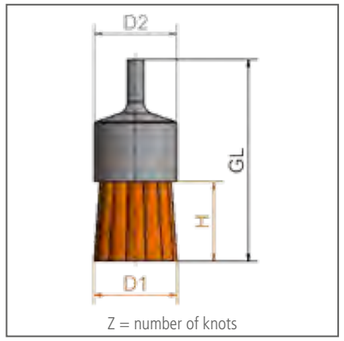

Knotted End Brushes with Shank
According to the RPM the brush will vary in dimension and enable the user to work in hard to reach areas such as drilled holes and recesses of all kinds.
The cups of the knot end brushes with stainless steel wire are **coated with plastic** to protect the stainless surface. Knotted end brushes with stainless steel wire are green characterized.

Further information on working on stainless steel you find at www.lessmann.com

Special End Brushes with Shank 6 Ø, one Knot
One-knotted End Brushes to render precise working possible.

End Brushes, filled with epoxy resin
End Brushes filled with epoxy resin are able to treat small, defined areas. The brushes are more aggressive and allow a precise handling, hence they are used e.g. for electrical cabinets or for treating mounting surfaces.

Item Nos. in bold are available ex stock.
Consider our minimum order value for *italic printed* article numbers (see page 164).

STH = steel wire, high tensile, straight
STM = brass coated steel, crimped
RO4 = stainless steel wire, straight, 1.4401

You can find our **tutorials** here:
www.lessmann.com/index.php/en/content/view/full/711

Knot End Brushes with Shank Ø 6 mm, Steel Wire

	D1/D2 mm | *inch*	GL mm | *inch*	H mm | *inch*	Z	ZF	RPM max.	Pack.	**STH 0.15** | *0.006"* Art.-No.	**STH 0.25** | *0.010"* Art.-No.	**STH 0.35** | *0.014"* Art.-No.	**STH 0.50** | *0.020"* Art.-No.
1	6/10 | *1/4/3/8*	65 | *2 1/2*	25 | *1*	1	D	4,500	10	available on demand	**451.258**	**451.278**	available on demand
2	19 | *3/4*	72 | *2 7/8*	28 | *1*	6	B	20,000	10		**453.258**	**453.278**	**453.298**
3	22 | *7/8*	72 | *2 7/8*	28 | *1*	8	B	20,000	10	*454.238*	**454.258**	**454.278**	**454.298**
4	29 | *1 1/8*	72 | *2 7/8*	28 | *1*	12	B	20,000	10	available on demand	**456.258**	**456.278**	**456.298**
5	19 | *3/4*	72 | *2 7/8*	28 | *1*	4	B	20,000	50	available on demand	available on demand	**452.278.GH***	available on demand

6 Knot End Brushes with Shank Ø 6 mm, Brass coated steel wire

D1/D2 mm | *inch*	GL mm | *inch*	H mm | *inch*	Z	ZF	RPM max.	Pack.	**STM 0.25** | *0.010"* Art.-No.	**STM 0.35** | *0.014"* Art.-No.
19 | *3/4*	72 | *2 7/8*	28 | *1*	6	D	20,000	10	**453.758**	**453.778**
22 | *7/8*	72 | *2 7/8*	28 | *1*	8	D	20,000	10	**454.758**	*454.778*
29 | *1 1/8*	72 | *2 7/8*	28 | *1*	12	D	20,000	10	**456.758**	*456.778*

7 Knot End Brushes with Shank Ø 6 mm, Stainless Steel Wire

D1/D2 mm | *inch*	GL mm | *inch*	H mm | *inch*	Z	ZF	RPM max.	Pack.	**RO4 0.15** | *0.006"* Art.-No.	**RO4 0.25** | *0.010"* Art.-No.	**RO4 0.35** | *0.014"* Art.-No.	**RO4 0.50** | *0.020"* Art.-No.
6/10 | *1/4/3/8*	65 | *2 1/2*	25 | *1*	1	D	4,500	10	available on demand	**451.458**	**451.478**	available on demand
19 | *3/4*	72 | *2 7/8*	28 | *1*	6	B	20,000	10	**453.338**	**453.358**	**453.378**	*453.398*
22 | *7/8*	72 | *2 7/8*	28 | *1*	8	B	20,000	10	*454.338*	**454.358**	**454.378**	**454.398**
29 | *1 1/8*	72 | *2 7/8*	28 | *1*	12	B	20,000	10	*456.338*	**456.358**	**456.378**	**456.398**

* filled with epoxy resin

Knot types ZF

B: Rose Bud
D: Fully knotted
(wire ends are cut completely)

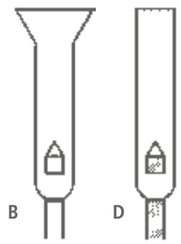

Miniature Brushes

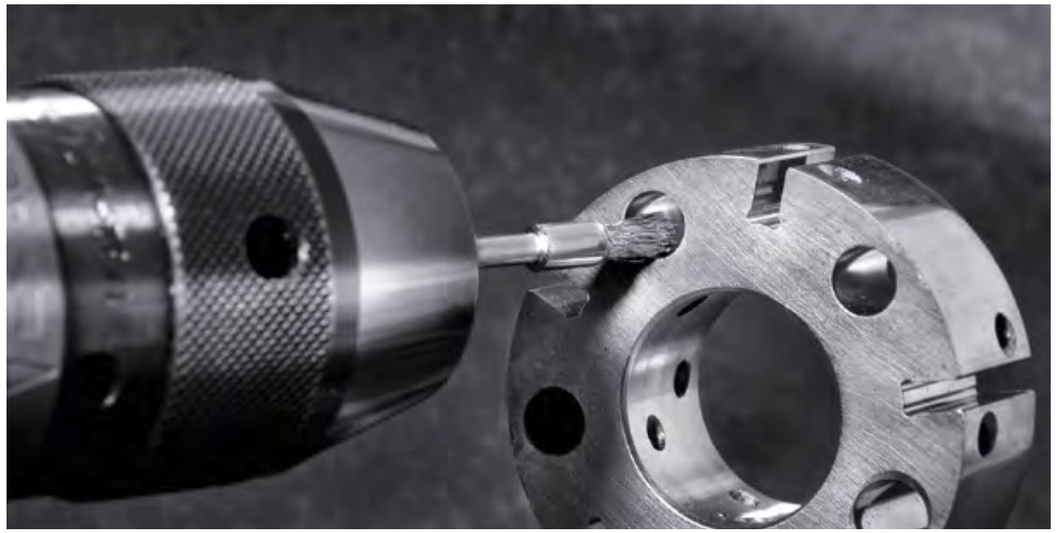

Miniature Brushes
Miniature Brushes are used for polishing, cleaning, or deburring of small-area surfaces or small working pieces. Miniature brushes remove waste and scale from weld seams or soldering points. The brushes are used on metal surfaces, steel, aluminum, cast iron, plastics, stone or wood.

Typical fields of applications:
- Precision tools
- Fine mechanics
- Pneumatic and hydraulics
- Electronics parts, e.g. plates

Miniature Brushes are available in different types as wheel, cup and end brushes.
The typical filling materials are steel wire, stainless steel wire, brass wire or abrasive bristles.

Stainless Steel Brushes
Information on working on stainless steel you find at www.lessmann.com

Please Note: Brushes with bristles or goat hair achieve an ideal brushing result by using polish.

Item Nos. in bold are available ex stock.
Consider our minimum order value for *italic printed* article numbers (see page 164).

STH	= steel wire, high tensile, straight
ROF	= stainless steel wire, crimped
MES	= brass wire, crimped
PA	= polyamide
SIC	= silicon carbide bristles
AO	= aluminium oxide bristles

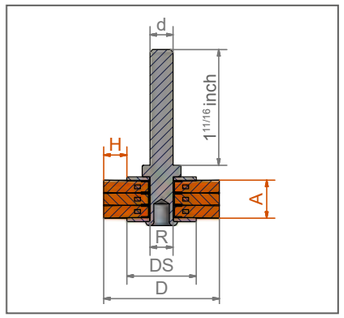

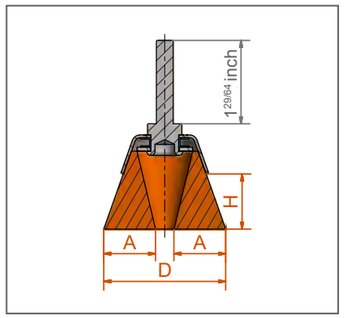

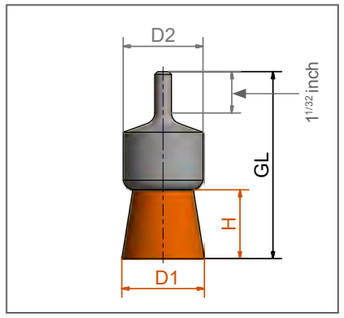

BRUSHES WITH SHANK

1 Miniature Wheel Brushes with shank Ø 3 mm

D mm | *inch*	A	H	RPM max.	Pack.	STH 0.10 Art.-No.	ROF 0.10 Art.-No.	MES 0.10 Art.-No.	SIC 320/0.55 Art.-No.	SIC 500/0.46 Art.-No.	SIC 800/0.25 Art.-No.	AO 320/0.50 Art.-No.
16 | *5/8*	2	3	15,000	10	**410.221**	**410.321**	*410.521*	*410.871*	*410.881*	*410.891*	*410.871.AO*
19 | *3/4*	2	5	12,000	10	**410.222**	**410.322**	**410.522**	*410.872*	*410.882*	*410.892*	*410.872.AO*
22 | *7/8*	2	6	10,000	10	**410.223**	**410.323**	**410.523**	*410.873*	**410.883**	*410.893*	*410.873.AO*

D mm | *inch*	A	H	RPM max.	Pack.	AO 500/0.46 Art.-No.	AO 600/0.30 Art.-No.	Diamond K400 Art.-No.	PA 0.15 Art.-No.	Bristle white Art.-No.	Bristle schwarz Art.-No.	Goat hair Art.-No.
16 | *5/8*	2	3	15,000	10	*410.801*	*410.891.AO*	*410.811.DB*	*410.031*	*410.001.WB*	*410.001.SB*	*410.001.ZH*
19 | *3/4*	2	5	12,000	10	*410.802*	*410.892.AO*	*410.812.DB*	*410.032*	*410.002.WB*	*410.002.SB*	*410.002.ZH*
22 | *7/8*	2	6	10,000	10	*410.803*	*410.893.AO*	*410.813.DB*	**410.033**	**410.003.WB**	**410.003.SB**	**410.003.ZH**

2 Miniature Cup Brushes with shank Ø 3 mm

D mm | *inch*	A	H	RPM max.	Pack.	STH 0.10 Art.-No.	ROF 0.10 Art.-No.	MES 0.10 Art.-No.	SIC 320/0.55 Art.-No.	SIC 500/0.46 Art.-No.	SIC 800/0.25 Art.-No.	AO 320/0.50 Art.-No.
15 | *5/8*	2	5	15,000	10	**430.222**	**430.322**	**430.522**	*430.872*	*430.882*	*430.892*	*430.872.AO*
18 | *3/4*	2	6	15,000	10	**430.223**	**430.323**	**430.523**	*430.873*	**430.883**	*430.893*	*430.873.AO*

D mm | *inch*	A	H	RPM max.	Pack.	AO 500/0.46 Art.-No.	AO 600/0.30 Art.-No.	Diamond K400 Art.-No.	PA 0.15 Art.-No.	Bristle white Art.-No.	Bristle schwarz Art.-No.	Goat hair Art.-No.
15 | *5/8*	2	5	15,000	10	*430.802*	*430.892.AO*	*430.812.DB*	**430.031**	**430.001.WB**	**430.001.SB**	**430.001.ZH**
18 | *3/4*	2	6	15,000	10	*430.803*	*430.893.AO*	*430.813.DB*	*430.032*	*430.002.WB*	*430.002.SB*	*430.002.ZH*

3 Miniature End Brushes with shank Ø 3 mm

D1 mm | *inch*	H	RPM max.	Pack.	STH 0.10 Art.-No.	ROF 0.10 Art.-No.	MES 0.10 Art.-No.	SIC 320/0.55 Art.-No.	SIC 500/0.46 Art.-No.	SIC 800/0.25 Art.-No.	AO 320/0.50 Art.-No.
5 | *13/64*	8	15,000	10	**450.221**	**450.311**	**450.521**	*450.871*	**450.881**	*450.891*	*450.871.AO*

D1 mm | *inch*	H	RPM max.	Pack.	AO 500/0.46 Art.-No.	AO 600/0.30 Art.-No.	Diamond K400 Art.-No.	PA 0.15 Art.-No.	Bristle white Art.-No.	Bristle schwarz Art.-No.	Goat hair Art.-No.
5 | *13/64*	8	15,000	10	*450.801*	*450.891.AO*	*450.821.DB*	**450.031**	**450.001.WB**	**450.001.SB**	**450.001.ZH**

All Brushes also available with shank Ø 2.34 and 3.17 mm.

ROKI
LESSMANN

LESSMANN

Hand Brushes

Hand Brushes
Hand Brushes are used everywhere, in the metal industry, construction work, in the workshop. They are found in every tool box. The complete range contains all types of filling materials, from coarse steel to the finest brass wire. The handles are made of beech wood with two hanging holes.

LESSMANN Handbrushes are of superb quality and yet are economic due to a fully automated and efficient production facility. Using modern marking systems individual printing of brands and EAN Bar Codes can be made. This is done by burning stamps or tampon printing at low cost.

Brake Caliper Brushes ROKI
This brush has been manufactured in co-operation with the automobile industry. This brush is used for cleaning off clogged lining deposits when changing brake pad linings. Thus the brush is very slim with a heavy straight wire filling. Made in this way it prevents damage to sensitive brake areas during use. The brush 182.431 has to the top a sloping filling and is therefore extra hard. New is the two-components-handle with the latest ergonomical aspects. Because of the design and the ergonomic handle this brush is remarkably versatile to use.

Hand Brushes with Two-Components Handles
apply to other requirements of modern high quality tools with best ergonomics.

Rivet Brushes
The V shaped filling material enables the removal of slag and scale from normally hard to reach welds and fillet welds

Hand Brushes with Scraper
For painters and bricklayers in the construction industry. These brushes are ideal for scraping off dirt or cement splashes.

Hand Brushes, Heavy Duty
These models have a larger wooden handle and a longer and dense wire filling than our standard models.

Universal Wire Brushes
For many uses, especially in the Do It Yourself section.

Stainless Steel Brushes
Information on brushing on stainless materials you will find at www.lessmann.com

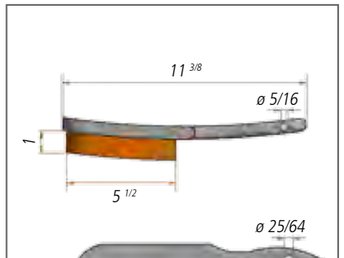

Measures in Inches

All standard hand brushes have a bar code stamp and LESSMANN-imprint.

Hand Brushes Standard

EAN

Hand Brushes

	Rows >		1	2	3	4	5	6
	Filling	Pack.	Art.-No.	Art.-No.	Art.-No.	Art.-No.	Art.-No.	Art.-No.
1	**STA** straight 0.35 | *0.014"*	12	**100.011**	**100.021**	**100.031**	**100.041**	**100.051**	**100.061**
1	**STA** straight 0.35 | *0.014"*	100		**100.020**	**100.030**	**100.040**	**100.050**	
1	**STM** crimped 0.30 | *0.012"*	12		**105.421**	**105.431**	**105.441**	**105.451**	**105.461**
1	**STA** crimped 0.20 | *0.008"*	12			**102.431**	**102.441**		
1	**STA** crimped 0.30 | *0.012"*	12	**102.611**	**102.621**	**102.631**	**102.641**	**102.651**	**102.661**
2	**ROF** crimped 0.15 | *0.006"*	12		**104.321**	**104.331**	**104.341**	**104.351**	
2	**ROF** crimped 0.20 | *0.008"*	12		**104.421**	**104.431**	**104.441**	**104.451**	
2	**ROF** crimped 0.35 | *0.012"*	12	**104.611**	**104.621**	**104.631**	**104.641**	**104.651**	**104.661**
2	**ROF** straight 0.35 | *0.012"*	12	**103.711**	**103.721**	**103.731**	**103.741**	**103.751**	**103.761**
2	**RO8** straight 0.30 | *0.012"*	12		**105.721**	**105.731**	**105.741**		
3	**MES** crimped 0.15 | *0.006"*	12		**107.321**	**107.331**	**107.341**	**107.351**	
3	**MES** crimped 0.25 | *0.010"*	12	*107.411*	**107.421**	**107.431**	**107.441**	**107.451**	**107.461**
3	**MES** crimped 0.35 | *0.014"*	12	*107.611*	**107.621**	**107.631**	**107.641**	**107.651**	**107.661**
3	**MES** straight 0.35 | *0.014"*	12		**106.621**	**106.631**	**106.641**	**106.651**	
	BRO crimped 0.20 | *0.008"*	12			**108.331**	**108.341**	**108.351**	
	BRO crimped 0.40 | *0.016"*	12				*108.041*		
	PA straight 0.40 | *0.016"*	12			**109.431**	**109.441**	**109.451**	
4	**FIB**	12				**109.741**		

Other filling materials and trim length on request.

Other sparkless brushes can be found on page 64

PEFC/04-31-0389

Promoting sustainable forest management www.pefc.de

Item Nos. in bold are available ex stock.
Consider our minimum order value for *italic printed* article numbers (see page 164).

STA = steel wire
STM = brass coated steel
ROF = stainless steel wire
RO8 = stainless steel wire, extremely heat resistant

MES = brass wire
BRO = bronze wire
PA = polyamide
FIB = fibre

Special Hand Brushes

1 2 3 4 5 6

Special Hand Brushes

	Filling	Rows	KL	KB	A	H	Pack.	Art.-No.
	ROKI Brake Caliper Brushes with Two-Components**		mm | *inch*	mm | *inch*	mm | *inch*	mm | *inch*		
1	**STA** straight 0.35 | *0.014"*	2 x 13	225 | *9*	12 | *1/2*	90 | *3 1/2*	22 | *7/8*	10	**182.401**
	STA crimped 0.30 | *0.012"*	2 x 13	225 | *9*	12 | *1/2*	90 | *3 1/2*	22 | *7/8*	10	**182.411**
2	**STA** straight 0.35 | *0.014"*	2 x 12/13	225 | *9*	12 | *1/2*	90 | *3 1/2*	12/18 | *1/2/5/8*	10	**182.431***
3	**ROF** straight 0.35 | *0.014"*	2 x 13	225 | *9*	12 | *1/2*	90 | *3 1/2*	22 | *7/8*	10	**182.421**
4	**MES** crimped 0.25 | *0.010"*	2 x 13	225 | *9*	12 | *1/2*	90 | *3 1/2*	22 | *7/8*	10	**182.451**
	Hand Brushes with Plastic Handles							
5	**STA** straight 0.35 | *0.014"*	2	285 | *11 1/4*	20 | *3/4*	130 | *5 1/8*	25 | *1*	10	**185.121**
	STA straight 0.35 | *0.014"*	3	285 | *11 1/4*	26 | *1*	130 | *5 1/8*	25 | *1*	10	**185.131**
	STA straight 0.35 | *0.014"*	4	285 | *11 1/4*	31 | *1 1/4*	130 | *5 1/8*	25 | *1*	10	**185.141**
	STA straight 0.35 | *0.014"*	5	285 | *11 1/4*	31 | *1 1/4*	130 | *5 1/8*	25 | *1*	10	**185.151**
	ROF crimped 0.35 | *0.014"*	2	285 | *11 1/4*	20 | *3/4*	130 | *5 1/8*	25 | *1*	10	**185.421**
	ROF crimped 0.35 | *0.014"*	3	285 | *11 1/4*	26 | *1*	130 | *5 1/8*	25 | *1*	10	**185.431**
	ROF crimped 0.35 | *0.014"*	4	285 | *11 1/4*	31 | *1 1/4*	130 | *5 1/8*	25 | *1*	10	**185.441**
	ROF crimped 0.35 | *0.014"*	5	285 | *11 1/4*	31 | *1 1/4*	136 | *5 1/8*	25 | *1*	10	**185.451**
	MES straight 0.35 | *0.014"*	2	285 | *11 1/4*	20 | *3/4*	130 | *5 1/8*	25 | *1*	10	**185.621**
	MES straight 0.35 | *0.014"*	3	285 | *11 1/4*	26 | *1*	130 | *5 1/8*	25 | *1*	10	**185.631**
	MES straight 0.35 | *0.014"*	4	285 | *11 1/4*	31 | *1 1/4*	130 | *5 1/8*	25 | *1*	10	**185.641**
	MES straight 0.35 | *0.014"*	5	285 | *11 1/4*	31 | *1 1/4*	130 | *5 1/8*	25 | *1*	10	**185.651**
	Hand Brushes with Two-Components Handles							
6	**ROF** straight 0.35 | *0.014"*	3	285 | *11 1/4*	26 | *1*	130 | *5 1/8*	25 | *1*	10	**186.431**

* Special hard brushes, pointed — For the food industry

** ROKI® = Registered Trademark

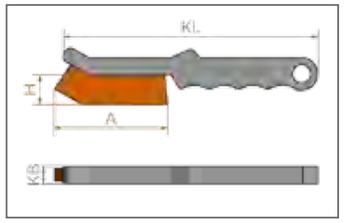

Special Hand Brushes

1 2 3 4 5 6 7

Special Hand Brushes

	Filling	Rows	KL	KB	A	H	Pack.	Art.-No.
1	**Rivet Brushes**		mm | *inch*	mm | *inch*	mm | *inch*	mm | *inch*		
	STA straight 0.35 | *0.014"*	3 x 15	290 | *11 3/8*	35 | *1 1/2*	135 | *5 3/8*	35 | *1 1/2*	12	**120.801**
	ROF straight 0.35 | *0.014"*	3 x 15	290 | *11 3/8*	35 | *1 1/2*	135 | *5 3/8*	35 | *1 1/2*	12	**120.811**
	RO8 straight 0.30 | *0.012"*	3 x 15	290 | *11 3/8*	35 | *1 1/2*	135 | *5 3/8*	35 | *1 1/2*	12	**120.831**
	ROF straight 0.35 | *0.014"* with Plastic Handles	3 x 15	290 | *11 3/8*	31 | *1 1/4*	135 | *5 3/8*	35 | *1 1/2*	12	**185.811**
2	**Hand Brushes with Scraper**							
	STA straight 0.35 | *0.014"*	4 x 15	290 | *11 3/8*	33 | *1 1/4*	130 | *5 1/8*	25 | *1*	12	**120.401**
	STA straight 0.35 | *0.014"*	6 x 15	290 | *11 3/8*	38 | *1 1/2*	130 | *5 1/8*	25 | *1*	12	*120.601*
	ROF straight 0.35 | *0.014"*	4 x 15	290 | *11 3/8*	33 | *1 1/4*	130 | *5 1/8*	25 | *1*	12	*120.412*
3	**Hand Brushes Heavy Duty**							
	STA straight 0.35 | *0.014"*	2 x 16	290 | *11 3/8*	30 | *1 1/4*	150 | *6*	32 | *1 1/4*	12	**136.101**
	STA straight 0.35 | *0.014"*	3 x 16	290 | *11 3/8*	35 | *1 1/2*	150 | *6*	32 | *1 1/4*	12	**136.102**
	STA straight 0.35 | *0.014"*	4 x 16	290 | *11 3/8*	40 | *1 3/8*	150 | *6*	32 | *1 1/4*	12	**136.103**
	Hand Brushes Export Model							
4	**STA** straight 0.35 | *0.014"*	4 x 17	300 | *12*	30 | *1 1/4*	130 | *5 1/8*	25 | *1*	12	**122.401**
5	**STA** straight 0.35 | *0.014"*	4 x 19	350 | *14*	30 | *1 1/4*	160 | *6 3/8*	30 | *1 1/4*	6	**122.801**
6	**BRO** straight 0.30 | *0.012"*	3 x 19	350 | *14*	25 | *1*	153 | *6 1/32*	30 | *1 1/4*	6	**122.771**
	BRO straight 0.30 | *0.012"*	4 x 19	350 | *14*	30 | *1 1/4*	150 | *6*	30 | *1 1/4*	6	**122.821**
	BRO straight 0.30 | *0.012"*	5 x 19	350 | *14*	30 | *1 1/4*	153 | *6 1/32*	30 | *1 1/4*	6	*122.871*
7	**Universal Wire Brushes**							
	STM crimped 0.30 | *0.012"*	1	260 | *10 1/4*	10 | *3/8*	135 | *5 3/8*	28 | *1*	24	**056.001**
	STA crimped 0.35 | *0.014"*	1	260 | *10 1/4*	10 | *3/8*	135 | *5 3/8*	28 | *1*	24	**056.301**
	ROF crimped 0.30 | *0.012"*	1	260 | *10 1/4*	10 | *3/8*	135 | *5 3/8*	28 | *1*	24	**056.501**
	MES crimped 0.30 | *0.012"*	1	260 | *10 1/4*	10 | *3/8*	135 | *5 3/8*	28 | *1*	24	**056.701**

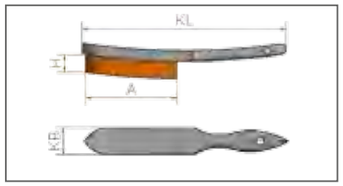

Item Nos. in bold are available ex stock.
Consider our minimum order value for *italic printed* article numbers (see page 164).

STA	= steel wire
STM	= brass coated steel
ROF	= stainless steel wire
RO8	= stainless steel wire, extremely heat resistant
MES	= brass wire
BRO	= bronze wire

Spark Plug Brushes

Spark Plug Brushes

	Filling	Rows	KL mm | *inch*	KB mm | *inch*	A mm | *inch*	H mm | *inch*	Pack.	Art.-No.
1	**MES** crimped 0.15 | *0.006"*	2 x 5	100 | *4*	15 | *5/8*	25 | *1*	15 | *5/8*	12	**125.111**
EAN 2	**MES** crimped 0.15 | *0.006"*	3 x 5/6	150 | *6*	15 | *5/8*	40 | *1 3/8*	15 | *5/8*	12	**125.211**
EAN	**STA** crimped 0.15 | *0.006"*	3 x 5/6	150 | *6*	15 | *5/8*	40 | *1 3/8*	15 | *5/8*	12	**125.201**
EAN	**ROF** crimped 0.15 | *0.006"*	3 x 5/6	150 | *6*	15 | *5/8*	40 | *1 3/8*	15 | *5/8*	12	**125.231**
EAN	**MES** crimped 0.15 | *0.006"* / PP	3 x 5/6	150 | *6*	15 | *5/8*	40 | *1 3/8*	15 | *5/8*	12	**125.221**
EAN	**MES** crimped 0.15 | *0.006"*	3 x 5/6	150 | *6*	15 | *5/8*	40 | *1 3/8*	15 | *5/8*	12	**125.311***
EAN	**ROF** crimped 0.20 | *0.008"*	3 x 5/6	150 | *6*	15 | *5/8*	40 | *1 3/8*	15 | *5/8*	12	**125.241**
EAN	**PA** straight 0.30 | *0.012"*	3 x 5/6	150 | *6*	15 | *5/8*	40 | *1 3/8*	15 | *5/8*	12	**125.251**
3	**BRO** crimped 0.15 | *0.006"*	3 x 5/6	200 | *8*	15 | *5/8*	40 | *1 3/8*	15 | *5/8*	12	**132.801**
	MES crimped 0.15 | *0.006"*	5 x 8/10	190 | *1 1/2*	24 | *1*	55 | *2 1/4*	18 | *3/4*	12	**125.511**
4	**MES** crimped 0.15 | *0.006"* / PP	5 x 8/10	190 | *1 1/2*	24 | *1*	55 | *2 1/4*	12 | *1/2*	12	**125.521**
5	**MES** crimped 0.15 | *0.006"*	4 x 6	155 | *6*	22 | *7/8*	40 | *1 3/8*	18 | *3/4*	12	**182.331****
	Soldering tip brush, extra dense filament, wooden handle orange							
EAN 6	**ROF** crimped 0.10 | *0.004"*	3 x 7/8	150 | *6*	15 | *5/8*	39 | *1 3/8*	9	12	**125.234**

* Wooden body varnished | ** Plastic body

Spark Plug Brushes
These small brushes are for all fine brushwork requiring thin wire.
They are available in different sizes and filling materials. The models 182.001 and 182.331 have plastic bodies, the other models have a beech wood body.
The body of 125.311 is varnished.

Soldering tip brushes
Soldering tip brushes have an extra dense and fine trimming. They are ideal for processing soldering tips and cleaning circuit boards after the soldering process as well as for many other fine jobs.

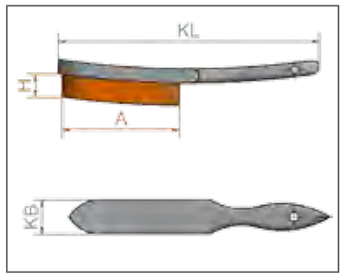

Item Nos. in bold are available ex stock.
Consider our minimum order value for *italic printed* article numbers (see page 164).

STA	= steel wire
ROF	= stainless steel wire
MES	= brass wire
BRO	= bronze wire
PA	= polyamide
PP	= polyprophylene
ROS	= horse hair

Promoting sustainable forest management www.pefc.de

PEFC/04-31-0389

Fine Scratch Brushes

Fine Scratch Brushes

	Filling	Rows	KL mm | *inch*	KB mm | *inch*	A mm | *inch*	H mm | *inch*	Pack.	Art.-No.
1	**MES** crimped 0.15 | *0.006"*	3	225 | *9*	16 | *5/8*	110 | *4 3/8*	20 | *3/4*	12	**126.311**
	MES crimped 0.15 | *0.006"*	4	225 | *9*	20 | *3/4*	110 | *4 3/8*	20 | *3/4*	12	**126.411**
	MES crimped 0.15 | *0.006"*	5	225 | *9*	24 | *1*	110 | *4 3/8*	20 | *3/4*	12	**126.511**
	MES crimped 0.15 | *0.006"*	6	225 | *9*	28 | *1*	110 | *4 3/8*	20 | *3/4*	12	**126.611**
	MES crimped 0.15 | *0.006"*	8	225 | *9*	36 | *1 1/2*	110 | *4 3/8*	20 | *3/4*	12	*126.811*
	MES crimped 0.08 | *0.003"*	4	225 | *9*	20 | *3/4*	110 | *4 3/8*	20 | *3/4*	12	**126.441**
	MES crimped 0.10 | *0.004"*	4	225 | *9*	20 | *3/4*	110 | *4 3/8*	20 | *3/4*	12	**126.431**
	MES crimped 0.15 | *0.006"*	4	225 | *9*	20 | *3/4*	100 | *4*	20 | *3/4*	12	**182.162****
	ROF crimped 0.15 | *0.006"*	4	225 | *9*	20 | *3/4*	110 | *4 3/8*	20 | *3/4*	12	**126.481**
2	**STA** crimped 0.15 | *0.006"*	4	225 | *9*	20 | *3/4*	110 | *4 3/8*	20 | *3/4*	12	**126.401**
3	**PA** straight 0.30 | *0.012"*	4	225 | *9*	20 | *3/4*	110 | *4 3/8*	20 | *3/4*	12	**126.451**
	PP straight 0.30 | *0.012"*	4	225 | *9*	20 | *3/4*	100 | *4 3/8*	20 | *3/4*	12	**182.172****
4	**ROS**	4	225 | *9*	20 | *3/4*	110 | *4 3/8*	20 | *3/4*	12	**126.472**
5	**ROF** crimped 0.15 | *0.006"*	4	225 | *9*	20 | *3/4*	100 | *4*	20 | *3/4*	12	**182.152****
	Special Brushes							
6	**MES** crimped 0.35 | *0.014"*	4 x 11/12	350 | *14*	22 | *7/8*	77 | *3*	10 | *3/8*	12	**182.807****
	MES crimped 0.35 | *0.014"*	4 x 11/12	400 | *15 3/4*	20 | *3/4*	77 | *3*	10 | *3/8*	12	**183.704****
	MES crimped 0.35 | *0.014"*	4 x 11/12	450 | *17 3/4*	22 | *7/8*	77 | *3*	10 | *3/8*	12	**182.811****
	MES crimped 0.30 | *0.012"*	5 x 9/8	700 | *27 1/2*	25 | *1*	54 | *2 1/4*	6 | *1/4*	12	*183.706***
7	**MES** crimped 0.35 | *0.014"*	4 x 11/12	350 | *14*	22 | *7/8*	80 | *3*	10 | *3/8*	12	**137.701**
8	**MES** crimped 0.30 | *0.012"*	5 x 9	700 | *27 1/2*	25 | *1*	54 | *2 1/4*	6 | *1/4*	12	**138.704**
	MES crimped 0.30 | *0.012"*	4 x 11/12	450 | *17 3/4*	22 | *7/8*	80 | *3*	8 | *5/16*	12	**138.705**
9	**MES** crimped 0.25 | *0.010"*	2 x 10	200 | *8*	15 | *5/8*	80 | *3*	19 | *3/4*	12	**132.701**

** Plastic body | For the food industry

Fine Scratch Brushes
Also called watchmaker and goldsmith brushes. The brushes have a very high density of filling wires and are available in different widths. These brushes are used among other things to apply solvents and other cleansing agents.

Special Brushes
The brushes were manufactured according to our customers' specification and show variations, which are possible through our flexible manufacturing procedures.

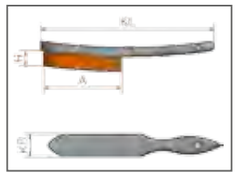

PEFC/04-31-0389

Grill brushes

Barbecue grill brushes
For regular cleaning of grill grates, Barbecue grill brushes are ideal to remove even stubborn and burned dirt. With the right brush, your grate shines like new again.

Barbecue grill brushes Standard, with scraper
The all-rounder for every barbecue, the standard Barbecue grill brushes with a stainless steel scraper.

Barbecue grill brushes curved Duty, dense filament
The curved handle makes handling these Barbecue grill brushes even easier. Dense filling with soft bristles and a scraper made of stainless steel , burned dirt has no chance.

All Barbecue grill brushes have a bar code stamp and LESSMANN-imprint.

Barbecue grill brushes straight Duty, with scraper
Due to the hard and dense filling, heavy design particularly well suited for cleaning stubborn dirt. With the scraper made of stainless steel an effortless removal of burned dirt is possible.

Barbecue grill brushes „curved Duty"
The allrounder modified with bent trimming and high-quality Two-Components handles plastic body. Universal and agile, suitable for different grill gates, this brush is a highlight for every grill owner.

All Barbecue grill brushes with practical hanging hole and in a CutCase packaging.

Scraper flat

Scraper round

Promoting sustainable forest management www.pefc.de

PEFC/04-31-0389

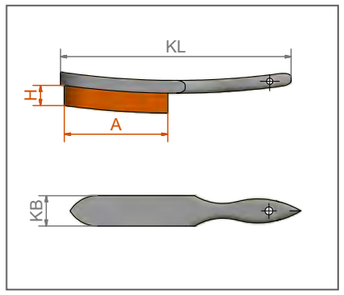

Item Nos. in bold are available ex stock.
Consider our minimum order value for *italic printed* article numbers (see page 164).

ROF = stainless steel wire

EAN

Barbecue grill brushes, crimped wire

Standard, with scraper

	KL mm | *inch*	KB mm | *inch*	H mm | *inch*	Rows	A mm | *inch*	Scraper	Pack.	ROF 0.35 Art.-Nr.
1	290 | *11 3/8*	33 | *1 1/4*	25 | *1*	4	130 | *5 1/8*	flat	8	**120.413**
2	290 | *11 3/8*	33 | *1 1/4*	25 | *1*	4	130 | *5 1/8*	round	8	**120.423**

curved Duty, dense filament, with scraper

	KL mm | *inch*	KB mm | *inch*	H mm | *inch*	Rows	A mm | *inch*	Scraper	Pack.	ROF 0.20 Art.-Nr.
3	250 | *10*	25 | *1*	23 | *7/8*	3	90 | *3 1/2*	round	8	**120.433**
4	250 | *10*	38 | *1 1/2*	23 | *7/8*	4	90 | *3 1/2*	round	8	**120.443**

straight Duty, with scraper

	KL mm | *inch*	KB mm | *inch*	H mm | *inch*	Rows	A mm | *inch*	Scraper	Pack.	ROF 0.30 Art.-Nr.
5	290 | *11 3/8*	33 | *1 1/4*	20 | *3/4*	5	90 | *3 1/2*	round	12	**135.455**
6	500 | *20*	50 | *2*	20 | *3/4*	9	90 | *3 1/2*	round	9	**138.469**

„curved Duty" with Two-Components Handles

	KL mm | *inch*	D mm | *inch*	BL mm | *inch*	Pack.	ROF 0.20 Art.-Nr.
7	280 | *11*	30 | *1 1/4*	110 | *4 3/8*	5	*599.501*
8	280 | *11*	30 | *1 1/4*	110 | *4 3/8*	5	*599.503*

Special Models

Hand Brushes Rectangular and Violin
There are many filling wires in these stable universal brushes.

Hand Brushes with Bracket
The wooden body is pointed to the front end, the plastic bracket is nailed on. The model 140.901 has an adjustable stock board which enables an adjustment to brush firmness.

These special models are mainly ordered by our export customers.

Brushes for removing wet storage stain
Zinc coated surfaces are needed for corrosion protection. Often after the zinc coating of work parts, under wet conditions chemical reactions occur which cause wet storage stain. The special bronze wire allows the effective removal of white rust without smashing the zinc coating which has to be treated.

Radiator Brushes
This narrow, long shaped brush is ideal for hard to reach areas on heaters and radiators. The model 121.211 has a straight body, the other models have a curved body.

Staining Brushes
The treated wood is prepared with these staining brushes. By using fibre and bronze wire the brushes are insensitive against all normal
chemical based solutions. The model 144.211 has an adjustable stock board which enables an adjustment to brush firmness.
With the staining brushes 144.701 and 144.801 the surface after the staining process is polished by the leather insert strips. Any standing wood fibre is also smoothed.

File Cleaners
The brushes for cleaning wood and metal files are available in different sizes and with different file card. The file card is glued on to the wooden body.

File Card in Rolls
Various roughing-up tools can be manufactured with this material, which is also available in different sizes and filling materials. Available in meters or if required in single pieces.

Bricklayer's Brushes
For pre and retreatment of brickwork for painters and bricklayers. All models have a jute or plastic strap.

Plasterer's Brushes
These are for roughening and structuring of plaster. Body is made of beech wood, the steel pins are hardened.

Spiked Rollers
For use before the removal of wallpaper. The spiked roller perforates the paper allowing absorption of stripping solvent. The roller is of plastic with the steel pins obliquely arranged to ensure maximum efficiency in use. The handle can be made longer with customised telescopic handles. For safety the roller is supplied with a protective cover.

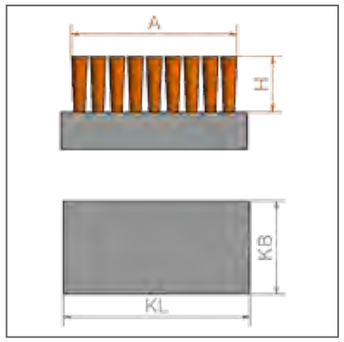

Item Nos. in bold are available ex stock.
Consider our minimum order value for *italic printed* article numbers (see page 164).

STA = steel wire
STM = brass coated steel
BRO = bronze wire

Special Hand Brushes

	Filling	Rows	KL	KB	A	H	Pack.	Art.-No.
	Hand Brushes Rectangular and Violin		mm | *inch*	mm | *inch*	mm | *inch*	mm | *inch*		
1	**STA** straight 0.35 | *0.014"*	6 x 19	185 | *7 1/4*	57 | *2 1/4*	175 | *7*	30 | *1 1/4*	12	**140.201**
2	**STA** straight 0.35 | *0.014"*	5	200 | *8*	60 | *2 3/8*	190 | *7 1/2*	35 | *1 1/2*	16	**141.231**
3	**STM** straight 0.35 | *0.014"*	5	200 | *8*	55 | *2 1/4*	170 | *6 5/8*	40 | *1 3/8*	36	*140.641*
	Hand Brushes with Bracket							
4	**STA** straight ca. 0.35 | *0.014"*	5	225 | *9*	55 | *2 1/4*	200 | *8*	38 | *1 1/2*	16	**140.901***
5	**STM** crimped 0.35 | *0.014"*	5	225 | *9*	55 | *2 1/4*	200 | *8*	38 | *1 1/2*	16	**140.811**
	Hand Brushes with Strap							
6	**STA** straight 0.50 | *0.020"*	7	200 | *8*	70 | *2 3/4*	185 | *7 1/4*	35 | *1 1/2*	12	**141.421**
	Hand Brushes for removing wet storage stain							
7	**BRO** crimped 0.08 | *0.003"*	11 x 18	120 | *4 3/4*	70 | *2 3/4*	110 | *4 3/8*	14 | *4/7*	4	**152.811**

* with adjustable board

Promoting sustainable forest management
www.pefc.de

PEFC/04-31-0389

Special Models

Radiator Brushes

	Filling	Rows	KL mm | *inch*	KB mm | *inch*	A mm | *inch*	H mm | *inch*	Pack.	Art.-No.
1	**STA** straight 0.25 | *0.010"*	3 x 13	420 | *16 1/2*	20 | *3/4*	115 | *4 1/2*	20 | *3/4*	12	**121.111***
2	**STA** straight 0.25 | *0.010"*	3 x 13	420 | *16 1/2*	20 | *3/4*	115 | *4 1/2*	20 | *3/4*	12	**121.211****

Staining Brushes

	Filling	Rows	KL mm | *inch*	KB mm | *inch*	A mm | *inch*	H mm | *inch*	Pack.	Art.-No.
3	**MES** crimped 0.15 | *0.006"*	7	150 | *6*	50 | *2*	140 | *5 1/2*	20 | *3/4*	12	**144.001**
4	**BRO** crimped 0.15 | *0.006"*	7	150 | *6*	50 | *2*	140 | *5 1/2*	20 | *3/4*	12	**144.011**
5	**BRO** 0.15 | *0.006"* / **FIB**	7	150 | *6*	50 | *2*	140 | *5 1/2*	20 | *3/4*	12	**144.021**
	BRO crimped 0.15 | *0.006"*	7	180 | *7*	60 | *2 3/8*	170 | *6 5/8*	20 | *3/4*	12	**144.111**
	BRO 0.15 | *0.006"* / **FIB**	7	180 | *7*	60 | *2 3/8*	170 | *6 5/8*	20 | *3/4*	12	**144.121**
6	**BRO** crimped 0.15 | *0.006"*	6	150 | *6*	50 | *2*	130 | *5 1/8*	20 | *3/4*	12	**144.211*****
	BRO crimped 0.15 | *0.006"*	6	150 | *6*	50 | *2*	130 | *5 1/8*	15 | *5/8*	12	**144.311**
7	**BRO** crimped 0.15 | *0.006"*	6	180 | *7*	60 | *2 3/8*	160 | *6 3/8*	15 | *5/8*	12	**144.411**

Wax Polishing Brush

	Filling	Rows	KL mm | *inch*	KB mm | *inch*	A mm | *inch*	H mm | *inch*	Pack.	Art.-No.
8	**Leather + FIB**	3/7	175 | *6 7/8*	60 | *2 3/8*	160 | *6 3/8*	20 | *3/4*	12	**144.701**

* Wooden body curved | ** Wooden body straight | *** with adjustable board

PEFC/04-31-0389

Promoting sustainable forest management www.pefc.de

Item Nos. in bold are available ex stock.
Consider our minimum order value for *italic printed* article numbers (see page 164).

STA	= steel wire
ROF	= stainless steel wire
MES	= brass wire
BRO	= bronze wire
PP	= polypropylene
FIB	= fibre

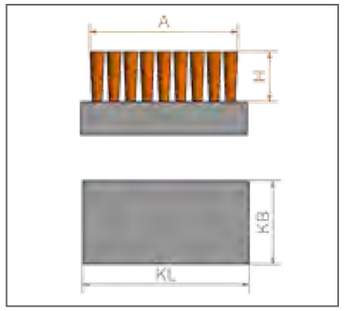

File Cleaners / Roughering Brushes

	File Cards	KL mm | *inch*	KB mm | *inch*	A mm | *inch*	Pack.	Art.-No.
1	**STA** 0.30 | *0.012"*	210 | *8 1/4*	25 | *1*	100 | *4*	12	**037.101**
	STA 0.30 | *0.012"*	250 | *10*	40 | *1 3/8*	115 | *4 1/2*	12	**037.201**
	STA 0.30 | *0.012"*	250 | *10*	40 | *1 3/8*	115 | *4 1/2*	100	**037.200**
	ROF 0.30 | *0.012"*	250 | *10*	40 | *1 3/8*	115 | *4 1/2*	12	**037.221**
2	**ROF** 0.60	170 | *6 3/4*	30 | *1 1/4*	24 | *1*	20	**037.710**

3 File Cards

Filling, without interval	STA 0.30 width 25 Art.-No.	STA 0.30 width 38 Art.-No.	STA 0.30 width 51 Art.-No.	ROF 0.30 width 38 Art.-No.
	000.311*	**000.321***	**000.331***	**000.323***

Bricklayer's Brushes with Strap

	Filling	Rows	KL mm | *inch*	KB mm | *inch*	A mm | *inch*	H mm | *inch*	Pack.	Art.-No.
4	**STA** straight 0.25 | *0.010"*	9	210 | *8 1/4*	100 | *4*	200 | *8*	35 | *1 1/2*	12	**142.101**
5	**MES** crimped 0.20 | *0.008"* / **PP**	9	210 | *8 1/4*	95 | *3 3/4*	200 | *8*	20 | *3/4*	12	**142.211****

Plasterer's Brushes

	Filling	KL mm | *inch*	KB mm | *inch*	A mm | *inch*	H mm | *inch*	Pack.	Art.-No.
6	86 steel Pins hardend	190 | *7 1/2*	97 | *3 3/4*	165 | *6 1/2*	16 | *5/8*	12	**061.101**

7 Spiked Rollers

	Filling	Rows	KL mm | *inch*	KB mm | *inch*	A mm | *inch*	H mm | *inch*	Pack.	Art.-No.
	steel Pins on plastic roller, with Protective Cover	12	290 | *11 3/8*	25 | *1*	148 | *5 7/8*	7 | *1/4*	10	**064.050**

* Please indicate length. | ** Wooden body varnished

Brooms and Scrubs

Brooms and Scrubs
Brooms and Scrubs for the use in all industrial companies and craftsman's establishments.

The shown brooms and scrubs are the best selling models.

The brooms with flat steel wire 1.80 x 0.45 mm make the so called broom lines on cement floors thus receiving a rough surface.

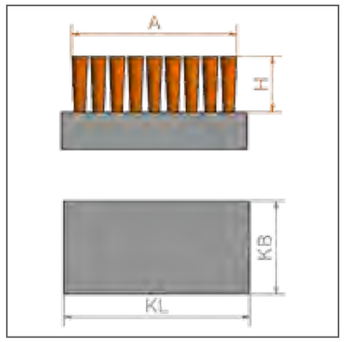

Item Nos. in bold are available ex stock.
Consider our minimum order value for *italic printed* article numbers (see page 164).

STA = steel wire
ROF = stainless steel wire
MES = brass wire

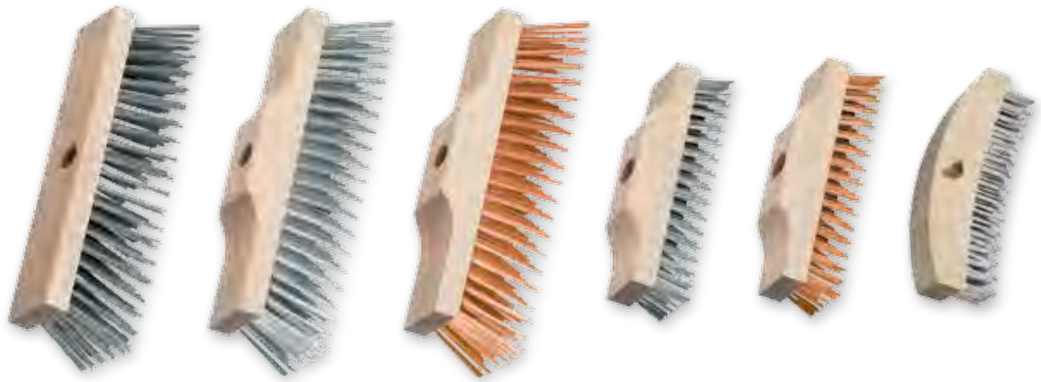

1 2 3 4 5 6

1 Brooms Flat Wooden Stock, with Handle Hole 23 Ø

Filling	Rows	KL mm | *inch*	KB mm | *inch*	A mm | *inch*	H mm | *inch*	Pack.	Art.-No.
STA straight 0.50 | *0.020"*	5 x 16/17	250 | *10*	60 | *2 3/8*	270 | *10 5/8*	70 | *2 3/4*	12	**147.101**
STA straight 0.50 | *0.020"*	5 x 20	300 | *12*	60 | *2 3/8*	330 | *13*	70 | *2 3/4*	12	**147.401**
STA straight 0.50 | *0.020"*	6 x 20/21	300 | *12*	70 | *2 3/4*	330 | *13*	70 | *2 3/4*	12	**147.201**
STA straight 0.50 | *0.020"*	6 x 20/21	300 | *12*	70 | *2 3/4*	330 | *13*	70 | *2 3/4*	42	**147.200**
ROF straight 0.50 | *0.020"*	6 x 20	300 | *12*	70 | *2 3/4*	330 | *13*	70 | *2 3/4*	12	**147.261**
STA straight 0.50 | *0.020"*	6 x 23	350 | *14*	70 | *2 3/4*	390 | *15 3/8*	70 | *2 3/4*	12	**147.301**

Brooms Raised Wooden Stock, with Handle Hole 23 Ø

	Filling	Rows	KL mm | *inch*	KB mm | *inch*	A mm | *inch*	H mm | *inch*	Pack.	Art.-No.
2	**STA** straight 0.50 | *0.020"*	5 x 16/17	250 | *8 1/4*	60 | *2 3/8*	270 | *10 5/8*	70 | *2 3/4*	12	**146.101**
2	**STA** straight 0.50 | *0.020"*	6 x 20/21	300 | *12*	70 | *2 3/4*	330 | *13*	70 | *2 3/4*	12	**146.201**
3	**BRO** straight 0.40 | *0.016"*	6 x 20/21	300 | *12*	70 | *2 3/4*	320 | *12 51/64*	55 | *2 1/8*	12	*146.270*
2	**STA** straight 0.50 | *0.020"*	6 x 23/24	350 | *14*	70 | *2 3/4*	390 | *15 3/8*	70 | *2 3/4*	12	**146.301**

Scrubs, with Handle Hole 23 Ø

	Filling	Rows	KL mm | *inch*	KB mm | *inch*	A mm | *inch*	H mm | *inch*	Pack.	Art.-No.
4	**STA** straight 0.35 | *0.014"*	6 x 16/17	220 | *8 5/8*	60 | *2 3/8*	225 | *9*	35 | *1 1/2*	12	**148.101**
4	**ROF** straight 0.35 | *0.014"*	6 x 16/17	220 | *8 5/8*	60 | *2 3/8*	225 | *9*	35 | *1 1/2*	12	**148.161**
4	**MES** crimped 0.25 | *0.010"*	6 x 16/17	220 | *8 5/8*	60 | *2 3/8*	225 | *9*	25 | *1*	12	**148.141**
5	**BRO** straight 0.40 | *0.016"*	6 x 16/17	220 | *8 5/8*	60 | *2 3/8*	225 | *9*	40 | *1*	12	*148.170*
4	**STA** straight 0.25 | *0.010"*	6 x 17/18	240 | *9 1/2*	70 | *2 3/4*	245 | *9 5/8*	35 | *1 1/2*	12	**148.201**
6	**STA** straight 0.40 | *0.016"*	7 x 15/16	230 | *9*	65 | *2 1/2*	220 | *8 5/8*	35 | *1 1/2*	12	**148.601***

* Wooden body curved

Promoting sustainable forest management
www.pefc.de

PEFC/04-31-0389

Dusters

Dusters
Depending on the surrounding and application area, dusters are available in various models and with various filling materials. For coarse and light adherent dirt, dusters with wire filament are ideal.

Next to horse hair we offer dusters with coco filament as a good value alternative.

The duster with polyprophylene filament (straight plastic fibre) can be cleaned easily and therefore other surfaces do not get dirty. Since the water absorption of polypropylene is very low, the duster can be used also under wet conditions.

Further models in special execution with different filling materials and trim length available.

Dusters custom-made
Beside the mentioned models we provide special models with filling material and trim length according to your requirements.

Item Nos. in bold are available ex stock.
Consider our minimum order value for *italic printed* article numbers (see page 164).

STA	= steel wire
MES	= brass wire
PP	= polyprophylene
ROS	= horse hair

Dusters

	Filling	Rows	KL mm | *inch*	KB mm | *inch*	A mm | *inch*	H mm | *inch*	Pack.	Art.-No.
1	**Coco**	4	280 | *11*	40 | *1 3/8*	160 | *6 3/8*	70 | *2 3/4*	12	**124.201**
2	**Coco** Long Duty	4	430 | *17*	40 | *1 3/8*	165 | *6 1/2*	70 | *2 3/4*	20	**124.401**
3	**MES** crimped 0.25 | *0.010"*	4	320 | *12 1/2*	35 | *1 1/2*	150 | *6*	40 | *1 3/8*	12	**124.121**
4	**BRO** crimped 0.25 | *0.010"*	4	320 | *12 1/2*	35 | *1 1/2*	140 | *6 5/8*	40 | *1 3/8*	12	*124.181*
5	**STA** straight 0.25 | *0.010"*	4	320 | *12 1/2*	35 | *1 1/2*	150 | *6*	60 | *2 3/8*	12	**124.101**
EAN 6	**ROS**	6	300 | *12*	43 | *1 3/4*	165 | *6 1/2*	50 | *2*	20	**124.301***
7	**PP**	4	320 | *12 1/2*	35 | *1 1/2*	175 | *6 7/8*	70 | *2 3/4*	12	**124.801**
	PP Long Duty	4	430 | *17*	40 | *1 3/8*	165 | *6 1/2*	70 | *2 3/4*	12	**124.841**

* Wooden body varnished

Weed Brushes and Weed Brooms

Weed Brush
This brush with V shaped filling material is ideal for the removal of moss and weeds in joints and edges on pavements, courtyards or cobbled areas.

Due to the long handle an ergonomic and effective working is possible. Without stooping, your back is preserved, though it is possible to remove weeds aggressively and precisely.

The brush with set filling material allows a cleaning of edges and joints which are hard to reach.

Weed Broom
As well as the weed brush, the weed broom is a brush for outdoors.
Ideally moss and weeds can be removed from terrace boards or cobblestones. An easy and clean working without stooping makes the brush to an effective broom with depth effects. High quality, with brass coated steel wires guarantee a long lifetime of the brush in the well known LESSMANN quality „Made in Germany".

All standard hand brushes have a bar code stamp and LESSMANN-imprint.

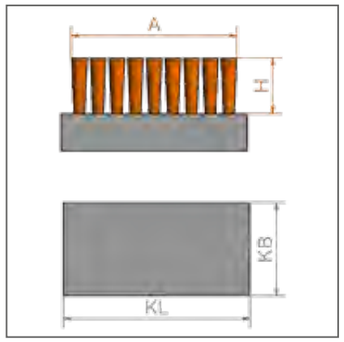

Item Nos. in bold are available ex stock.
Consider our minimum order value for *italic printed* article numbers (see page 164).

STA = steel wire
STM = brass coated steel

EAN

Weed Brushes, with Handle Hole 23 Ø

	Filling	KL	KB	H	Rows	Pack.	Art.-No.
	without handle	mm | *inch*	mm | *inch*	mm | *inch*			
1	**STA** 0.35 | *0.014"*	100 | *4*	35 | *1 1/2*	36 | *1 1/2*	3	25	**151.108**
2	**STM** 0.35 | *0.014"* Filling set in working direction	100 | *4*	35 | *1 1/2*	36 | *1 1/2*	3	25	**151.511**
3	**STA** 0.35 | *0.014"* with scraper	100 | *4*	35 | *1 1/2*	42 | *1 5/8*	3	25	**151.109**
	with handle, 1400 mm long, Ø 28 mm						
4	**STA** 0.35 | *0.014"*	100 | *4*	35 | *1 1/2*	36 | *1 1/2*	3	30	*151.991.07**
	STM 0.35 | *0.014"* Filling set in working direction	100 | *4*	35 | *1 1/2*	36 | *1 1/2*	3	30	*151.995.07**

EAN

Weed Broom, with Handle Hole 23 Ø

	Filling	KL	KB	H	Rows	Pack.	Art.-No.
	without handle	mm | *inch*	mm | *inch*	mm | *inch*			
5	**STM** 0.50 | *0.020"*	140 | *5 1/2*	60 | *2 3/8*	70/60 | *2 3/4 /2 3/8*	10/9	16	**152.510**
	with handle, 1400 mm long, Ø 28 mm						
6	**STM** 0.50 | *0.020"*	140 | *5 1/2*	60 | *2 3/8*	70/60 | *2 3/4 /2 3/8*	10/9	12	**152.995.07***

* Delivery only in full packaging units.

Promoting sustainable forest management www.pefc.de

PEFC/04-31-0389

LESSMANN

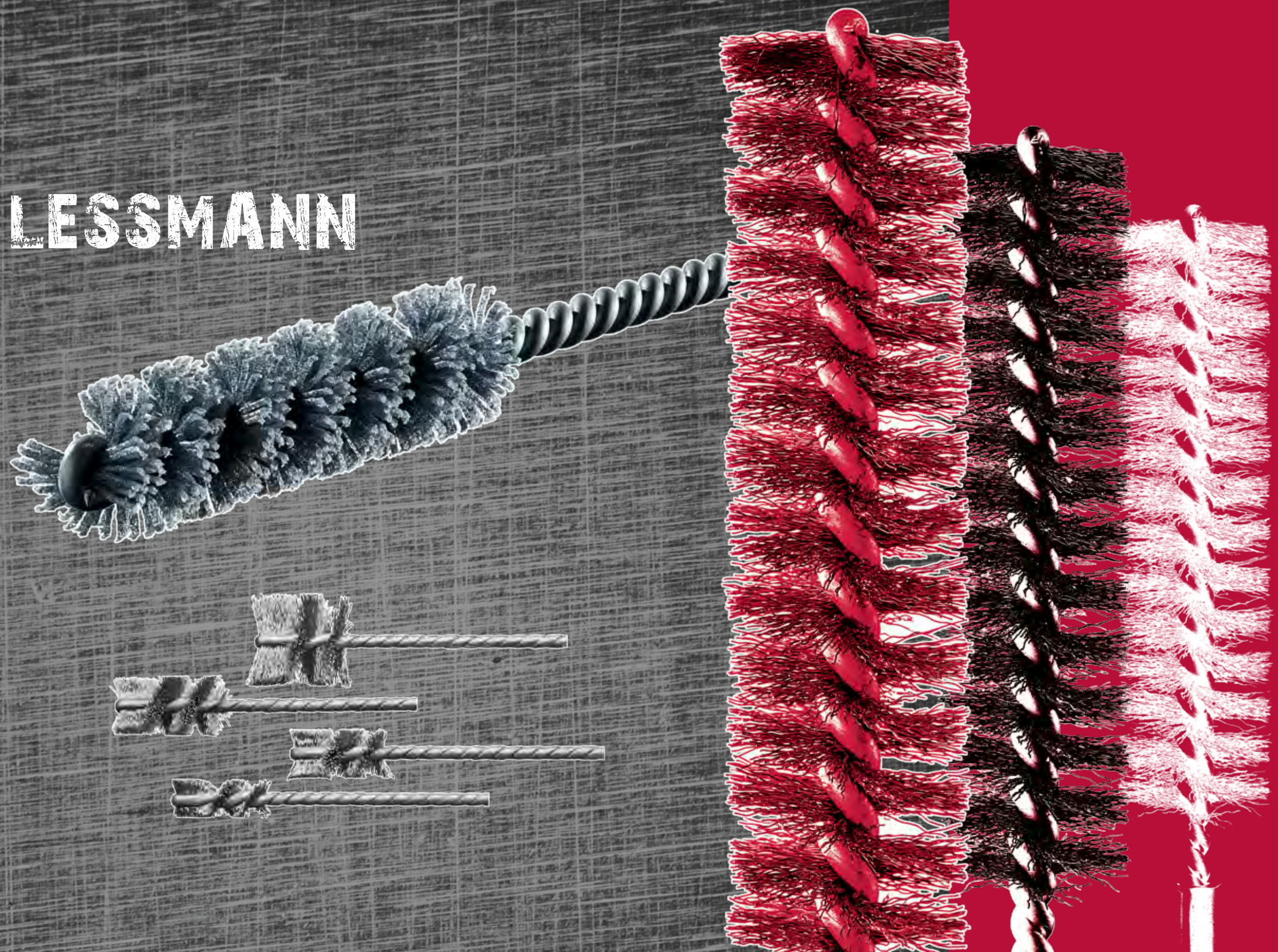

Micro Interior Brushes

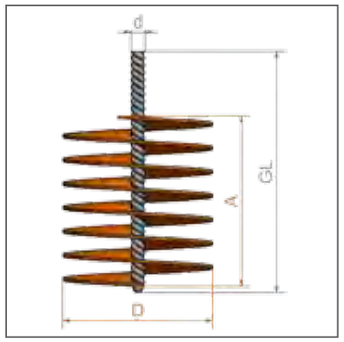

Item Nos. in bold are available ex stock.
Consider our minimum order value for *italic printed* article numbers (see page 164).

AO = aluminium oxide bristles

Interior brushes with zinc coated twisted wire and single spiral
Due to the filling of aluminium oxide or silicon carbide their usage is more flexible than with conventional interior brushes.

Interior brushes with abrasive filaments are usually used for deburring bores, cross bores, o-ring recesses and for polishing and cleaning small bores.

Due to the flexible surface of the bristles the interior brushes suit to the contour of the bore and areas which are hard to reach can be treated. Abrasive bristles also have grinding effects on the side. That allows a rounding of the edges also on cross bores.

Also brushes with **diamond** filling are available, that causes an even more aggressive surface of the brush.

Micro Interior Brushes, Steel Wire
Micro interior brushes with steel wire are used as thread brushes for descaling, deburring or cleaning:
- Cross corners
- Crossovers
- Tap holes
- Slots

The brushes can be used either manually or mechanically.

Please do not hesitate to contact us, we will also find for special applications a compatible solution. Due to a fully automated production, LESSMANN offers high quality to reasonable prices.

Mechanical Application
Only use the brush with the indicated maximal peripheral speed (RPM max.). The max. RPM only is allowed when the brush is clamped min. for 10 mm into the tool. When the brush is inserted into the suitable work piece, higher RPMs are possible. **Only use the brush right rotating.**

Stainless Steel Brushes
Information on working on stainless steel you find at www.lessmann.com

Mikro Interior Brushes are also available with special contours, e.g. **layered cut.**

Please ask for our special leaflet „Interior Brushes".

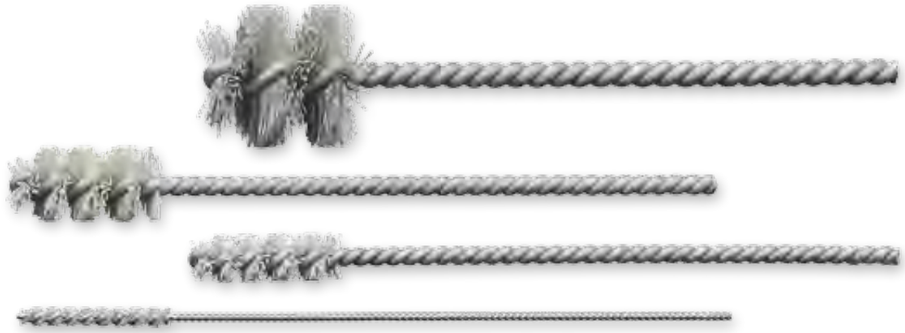

Microabrasive Interior Brushes IBE, Aluminum Oxide Bristles

D mm | *inch*	GL mm | *inch*	A mm | *inch*	d mm | *inch*	RPM max.	Pack.	AO 600/0.30 Art.-No.	AO 1000/0.25 Art.-No.
3.2 | *1/8*	125 | *5*	25 | *1*	1.5 | *1/16*	800	10	**541.084**	*540.067*
4.2 | *11/64*	125 | *5*	25 | *1*	2.2 | *3/32*	1,000	10	**541.045**	*540.068*
4.8 | *3/16*	125 | *5*	25 | *1*	2.2 | *3/32*	1,000	10	**541.083**	*540.069*
5.5 | *7/32*	125 | *5*	25 | *1*	2.2 | *3/32*	1,000	10	**541.079**	*540.070*
6.6 | *17/64*	125 | *5*	25 | *1*	2.5 | *3/32*	1,000	10	**541.037**	*540.071*
8.2 | *21/64*	125 | *5*	25 | *1*	3.2 | *1/8*	2,000	10	**541.076**	*540.072*
9.8 | *25/64*	125 | *5*	25 | *1*	3.2 | *1/8*	2,000	10	**541.077**	*540.073*
11.5 | *29/64*	125 | *5*	25 | *1*	3.7 | *5/32*	2,000	10	**541.085**	*540.074*
13 | *33/64*	125 | *5*	25 | *1*	3.7 | *5/32*	2,000	10	**541.087**	*540.075*
17.5 | *11/16*	125 | *5*	25 | *1*	4.7 | *3/16*	2,000	10	**541.039**	
16 | *5/8*	125 | *5*	25 | *1*	3.7 | *5/32*	2,000	10	**541.089**	*540.076*
20 | *51/64*	125 | *5*	25 | *1*	4.7 | *3/16*	2,000	10	**541.093**	*540.077*
25 | *1*	125 | *5*	25 | *1*	4.7 | *3/16*	2,000	10	**541.095**	*540.078*

You can find our **Enquiry Forms** in the respecitve category under:
www.lessmann.com/index.php/en/content/view/full/61
or in the catalog from page 158

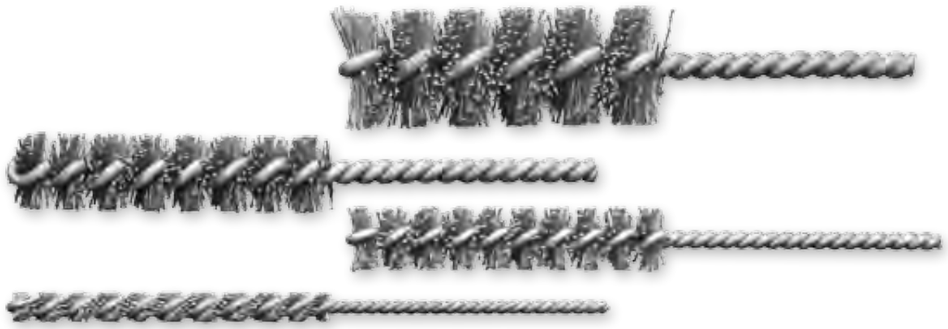

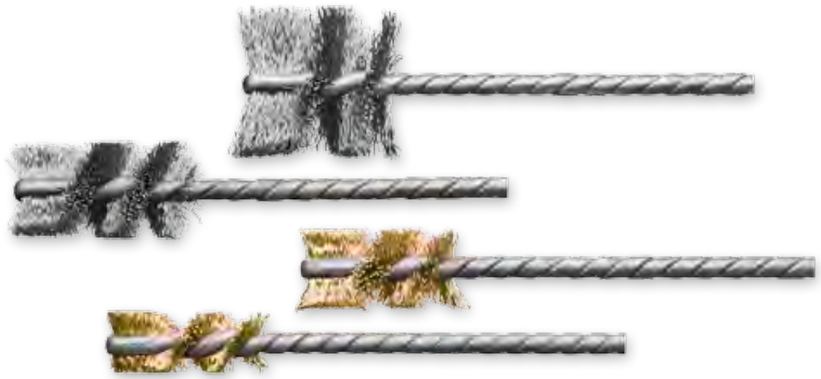

Microabrasive Interior Brushes IBE, Silicon Carbide Bristles

D mm | *inch*	GL mm | *inch*	A mm | *inch*	d mm | *inch*	RPM max.	Pack.	**SIC 120/0.6** Art.-No.	**SIC 320/0.6/**0.3** Art.-No.	**SIC 1000/0.25** Art.-No.
1.2 | *3/64*	100 | *4*	12 | *15/32*	0.7 | *1/32*	500	10			**545.200.12***
1.9 | *5/64*	100 | *4*	18 | *45/64*	0.7 | *1/32*	500	10			**545.200.19**
2.2 | 3/32	100 | *4*	18 | *45/64*	0.9 | *1/32*	1,000	10		*543.200.22***	**545.200.22**
2.6 | *7/64*	100 | *4*	25 | *1*	1.0 | *3/64*	1,000	10		*543.200.26***	**545.200.26**
3.2 | *1/8*	100 | *4*	25 | *1*	1.7 | *1/16*	1,000	10		*543.200.32***	**545.200.32**
4.2 | *11/64*	125 | *5*	25 | *1*	2.2 | *3/32*	1,000	10	*541.200.42*	*543.200.42***	**545.200.42**
5.5 | *7/32*	125 | *5*	25 | *1*	2.2 | *3/32*	1,000	10	*541.200.55*	*543.200.55***	**545.200.55**
6 | *15/64*	125 | *5*	65 | *2 9/16*	3.0 | *1/8*	1,500	10	**541.200.60**	**543.200.60**	*545.200.60*
8 | *5/16*	125 | *5*	65 | *2 9/16*	3.0 | *1/8*	1,500	10	**541.200.80**	**543.200.80**	*545.200.80*
10 | *25/64*	125 | *5*	65 | *2 9/16*	3.7 | *9/64*	2,000	10	**541.201.00**	**543.201.00**	*545.201.00*
13 | *33/64*	125 | *5*	65 | *2 9/16*	3.7 | *9/64*	2,000	10	**541.201.30**	**543.201.30**	*545.201.30*
16 | *5/8*	125 | *5*	65 | *2 9/16*	5.2 | *13/64*	2,000	10	**541.201.60**	**543.201.60**	*545.201.60*
19 | *3/4*	125 | *5*	65 | *2 9/16*	5.2 | *13/64*	2,000	10	**541.201.90**	**543.201.90**	*545.201.90*
20 | *51/64*	125 | *5*	65 | *2 9/16*	5.7 | *7/32*	2,000	10	**541.202.00**		
22 | *7/8*	125 | *5*	65 | *2 9/16*	5.7 | *7/32*	2,000	10	**541.202.20**	**543.202.20**	*545.202.20*
25 | *1*	125 | *5*	65 | *2 9/16*	5.7 | *7/32*	2,000	10	**541.202.50**	**543.202.50**	*545.202.50*
28 | *1 7/64*	125 | *5*	65 | *2 9/16*	5.7 | *7/32*	2,000	10	**541.202.80**	**543.202.80**	*545.202.80*
30 | *1 3/16*	125 | *5*	65 | *2 9/16*	5.7 | *7/32*	2,000	10	**541.203.00**	**543.203.00**	*545.203.00*
32 | *1 17/64*	125 | *5*	65 | *2 9/16*	5.7 | *7/32*	2,000	10	**541.203.20**	*543.203.20*	*545.203.20*
38 | *1 1/2*	125 | *5*	65 | *2 9/16*	5.7 | *7/32*	2,000	10	**541.203.80**		

* Type IB: with straight / clipped off point

Mechanical Application
Only use the brush with the indicated maximal peripheral speed (RPM max.). The max. RPM only is allowed when the brush is clamped min. for 10 mm into the tool. When the brush is inserted into the suitable work piece, higher RPMs are possible. **Only use the brush right rotating.**

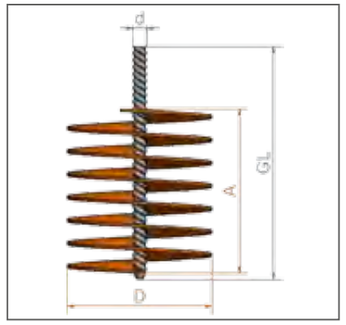

Item Nos. in bold are available ex stock.
Consider our minimum order value for *italic printed* article numbers (see page 164).

STH = steel wire, high tensile, straight
ROH = stainless steel wire, high tensile
MES = brass wire
PA = polyamide
SIC = silicon carbide bristles

Micro Interior Brushes IBH, Steel Wire, Stainless Steel Wire

D mm | *inch*	GL mm | *inch*	A mm | *inch*	d mm | *inch*	RPM max.	Pack.	**STH 0.12** | *0.005"* Art.-No.	**STH 0.20** | *0.008"* Art.-No.	**ROH 0.12** | *0.005"* Art.-No.	**ROH 0.20** | *0.008"* Art.-No.
6 | *15/64*	90 | *3 1/2*	25 | *1*	3.2 | *1/8*	3,500	10	**564.220.60**			
8 | *5/16*	90 | *3 1/2*	25 | *1*	3.2 | *1/8*	3,500	10	**564.220.80**			
10 | *25/64*	90 | *3 1/2*	25 | *1*	3.8 | *5/32*	3,500	10	**565.321.00**	**565.341.00**	**565.521.00**	
13 | *33/64*	90 | *3 1/2*	25 | *1*	3.8 | *5/32*	3,500	10	**565.321.30**	**565.341.30**	**565.521.30**	
16 | *5/8*	90 | *3 1/2*	25 | *1*	3.8 | *5/32*	3,000	10	**565.321.60**	**565.341.60**	**565.521.60**	*565.541.60*
19 | *3/4*	90 | *3 1/2*	25 | *1*	3.8 | *5/32*	3,000	10	**565.321.90**	**565.341.90**	*565.521.90*	*565.541.90*
20 | *51/64*	90 | *3 1/2*	25 | *1*	3.8 | *5/32*	3,000	10		**565.342.00**		**565.542.00**
21 | *53/64*	90 | *3 1/2*	25 | *1*	3.8 | *5/32*	3,000	10	*565.322.10*	*565.342.10*		
24 | *15/16*	90 | *3 1/2*	25 | *1*	3.8 | *5/32*	3,000	10	*565.322.40*			
25 | *1*	90 | *3 1/2*	25 | *1*	3.8 | *5/32*	3,000	10	**565.322.50**	**565.342.50**	565.522.50	**565.542.50**
29 | *1 9/64*	90 | *3 1/2*	25 | *1*	3.8 | *5/32*	3,000	10	*565.322.90*	*565.342.90*		*565.542.90*
32 | *1 17/64*	90 | *3 1/2*	25 | *1*	3.8 | *5/32*	3,000	10	*565.323.20*	*565.343.20*		*565.543.20*

Micro Interior Brushes IBH, Brass Wire and Polyamide

D mm | *inch*	GL mm | *inch*	A mm | *inch*	d mm | *inch*	RPM max.	Pack.	**MES 0.15** | *0.006"* Art.-No.	**MES 0.20** | *0.008"* Art.-No.	**PA 0.30** | *0.012"* Art.-No.
8 | *5/16*	90 | *3 1/2*	25 | *1*	3.2 | *1/8*	3,500	10	*565.730.80*		
10 | *25/64*	90 | *3 1/2*	25 | *1*	3.8 | *5/32*	3,500	10	**565.731.00**		**565.061.00**
13 | *33/64*	90 | *3 1/2*	25 | *1*	3.8 | *5/32*	3,500	10	**565.731.30**		**565.061.30**
16 | *5/8*	90 | *3 1/2*	25 | *1*	3.8 | *5/32*	3,000	10	**565.731.60**		**565.061.60**
20 | *51/64*	90 | *3 1/2*	25 | *1*	3.8 | *5/32*	3,000	10		**565.742.00**	**565.062.00**
25 | *1*	90 | *3 1/2*	25 | *1*	3.8 | *5/32*	3,000	10		**565.742.50**	**565.062.50**

Cylinder Brushes

Cylinder Brushes
For manual cleaning and deburring of tubes, bores etc. Cylinder brushes are also available in other dimensions and materials. When ordering special sizes please mention full specification: total length, filling length, filling material, diameter and quantity.

Cylinder brushes, flat filament
These flat brushes with fine, crimped steel wire are ideal for cleaning areas which are hard to reach. A typical application is removing isolation rests in channels of stators or electric motors.

Stainless Steel Brushes
Information on working on stainless steel you find at www.lessmann.com

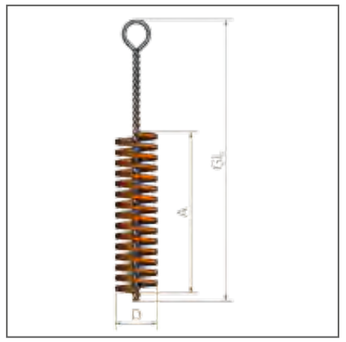

Item Nos. in bold are available ex stock.
Consider our minimum order value for *italic printed* article numbers (see page 164).

STA = steel wire
ROF = stainless steel wire
MES = brass wire
PA = polyamide

5 Cylinder brushes, flat filament with Loop IBZ

D mm | *inch*	GL mm | *inch*	A mm | *inch*	Pack.	STA 0,15 Art.-No.	STA 0,20 Art.-No.
4 x 10 | *5/32 x 25/64*	350 | 14	100 | *4*	10	**559.810**	
7 x 10 | 9/32 x 25/64	350 | 14	100 | *4*	10	**559.806**	
8 x 12 | 5/16 x 15/32	350 | 14	100 | *4*	10		**559.802**
8 x 15 | 5/16 x 19/32	350 | 14	100 | *4*	10		**559.803**
10 x 18 | 25/64 x 45/64	350 | 14	100 | *4*	10		**559.804**
10 x 22 | 25/64 x 7/8	350 | 14	100 | *4*	10		**559.805**
12 x 26 | 15/32 x 1 *1/32*	350 | 14	100 | *4*	10		**559.807**

6 Cylinder brushes, with Loop IBZ, Bronze Wire, fittings brass (low-sparkling)

D mm | *inch*	GL mm | *inch*	A mm | *inch*	Pack.	STA 0,20 Art.-No.
10 | *25/64*	330 | 13 3/16	100 | *4*	10	**542.034**
20 | 51/64	330 | 13 3/16	100 | *4*	10	**543.006**
30 | 1 3/16	330 | 13 3/16	100 | *4*	10	**543.926**

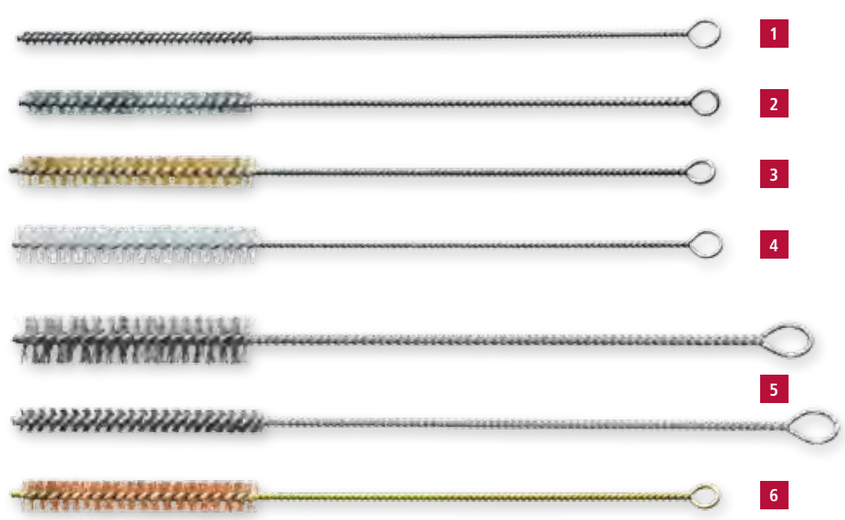

Cylinder Brushes with Loop IBZ

D mm | *inch*	GL mm | *inch*	A mm | *inch*	Pack.	1 STA Art.-No.	2 ROF Art.-No.	3 MES Art.-No.	4 PA Art.-No.
3 | *1/8*	300 | *12*	100 | *4*	10	**542.381**	**542.541**	**542.741**	**542.881**
4 | *5/32*	300 | *12*	100 | *4*	10	**542.351**	**542.508**	**542.740**	**542.823**
5 | *13/64*	300 | *12*	100 | *4*	10	**542.347**	**542.538**	**542.739**	**542.822**
6 | *15/64*	300 | *12*	100 | *4*	10	**542.301**	**542.501**	**542.701**	**542.801**
8 | *5/16*	300 | *12*	100 | *4*	10	**542.302**	**542.502**	**542.702**	**542.802**
10 | *25/64*	300 | *12*	100 | *4*	10	**542.303**	**542.503**	**542.703**	**542.803**
12 | *15/32*	300 | *12*	100 | *4*	10	**542.304**	**542.504**	**542.704**	**542.804**
13 | *33/64*	300 | *12*	100 | *4*	10	**542.305**	*542.505*	**542.705**	available on demand
14 | *9/16*	300 | *12*	100 | *4*	10	**542.306**	*542.506*	**542.706**	**542.812**
15 | *19/32*	300 | *12*	100 | *4*	10	**542.307**	**542.507**	**542.707**	**542.807**
16 | *5/8*	300 | *12*	100 | *4*	10	**542.308**	available on demand	*542.708*	**542.808**
18 | *45/64*	300 | *12*	100 | *4*	10	**542.309**	*542.542*	**542.709**	**542.818**
20 | *51/64*	300 | *12*	100 | *4*	10	**542.311**	**542.511**	**542.711**	**542.811**
25 | *1*	300 | *12*	100 | *4*	10	**542.313**	**542.513**	**542.713**	**542.813**
30 | *1 3/16*	300 | *12*	100 | *4*	10	**542.315**	**542.515**	**542.715**	**542.815**
35 | *1 3/8*	300 | *12*	100 | *4*	10	*542.317*	available on demand	*542.717*	available on demand
40 | *1 5/8*	300 | *12*	100 | *4*	10	**542.319**	*542.519*	**542.719**	**542.819**
50 | *2*	300 | *12*	100 | *4*	10	**542.320**	**542.520**	**542.720**	**542.820**

Cylinder brushes (long version) with Loop IBZ

D mm | *inch*	GL mm | *inch*	A mm | *inch*	Pack.	STA Art.-No.	ROF Art.-No.	MES Art.-No.	PA Art.-No.
10 | 25/64	500 | 20	100 | 4	10	**547.303**	available on demand	**547.703**	**547.803**
15 | *19/32*	500 | 20	100 | 4	10	**547.307**	available on demand	**547.707**	**547.807**
20 | *51/64*	500 | 20	100 | 4	10	**547.311**	available on demand	**547.711**	**547.811**
25 | *1*	500 | 20	100 | 4	10	**547.313**	available on demand	**547.713**	**547.813**
30 | *1 3/16*	500 | 20	100 | 4	10	**547.315**	available on demand	**547.715**	**547.815**

Hole Cleaning Brushes

Hole cleaning Brushes with Wooden Handle IBM

	D mm | *inch*	GL mm | *inch*	A mm | *inch*	Filling Dia.	Pack.	1 STA Art.-No.	2 ROF Art.-No.	3 MES Art.-No.
	10 | *25/64*	300 | *12*	100 | *4*	0.15	10	**560.310**	**560.510**	**560.710**
	15 | *19/32*	300 | *12*	100 | *4*	0.20	10	**560.315**	**560.515**	**560.715**
	20 | *51/64*	300 | *12*	100 | *4*	0.20	10	**560.320**	**560.520**	**560.720**
	25 | *1*	300 | *12*	100 | *4*	0.25	10	**560.325**	**560.525**	**560.725**
	30 | *1 3/16*	300 | *12*	100 | *4*	0.25	10	**560.330**	**560.530**	**560.730**
4	10/18 | *25/64 / 45/64*	200 | *8*	70 | *2 3/4*	0.15	10	**561.304***		

* conical filling

5 Cylinder Brushes with Shank 8 mm Ø IBG

D mm | *inch*	GL mm | *inch*	A mm | *inch*	Filling Dia.	RPM max.	Pack.	STA Art.-No.
13 | *33/64*	200 | *8*	55 | *2 11/64*	0.15	1.000	10	**503.311**
20 | *51/64*	200 | *8*	55 | *2 11/64*	0.20	1.000	10	**503.313**
26 | *1 1/32*	200 | *8*	55 | *2 11/64*	0.25	800	10	**503.314**
32 | *1 17/64*	200 | *8*	55 | *2 11/64*	0.25	800	10	**503.316**
38 | *1 1/2*	200 | *8*	55 | *2 11/64*	0.30	800	10	**503.318**

Hole Cleaning Brushes
Those hole cleaning brushes have a wooden handle. Hence the brushes allow a very comfortable working in various application fields.

Typically the brushes are used in construction industry or handcraft business for cleaning bore holes or slots.

Besides, Hole Cleaning Brushes are ideal for cleaning threads or deburring cross holes.

The model 561.304 has the filling material conically cut.

Mechanical Application
Only use the brush with the indicated maximal peripheral speed (RPM max.). The max. RPM only is allowed when the brush is clamped min. for 10 mm into the tool. When the brush is inserted into the suitable work piece, higher RPMs are possible. **Only use the brush right rotating.**

Bore Hole Cleaning Brushes

Interior Brushes for bore hole cleaning IBE, Steel, without Thread

D mm | *inch*	GL mm | *inch*	A mm | *inch*	Suitable for bore hole mm | *inch*	RPM max.	Pack.	STA 0.10 | *0.004"* Art.-No.	STA 0.15 | *0.006"* Art.-No.	STA 0.20 | *0.008"* Art.-No.
12 | *15/32*	130 | *5 1/8*	80 | *3*	10 | *25/64*	1,500	10	**504.301**		
14 | *9/16*	140 | *5 1/2*	80 | *3*	12 | *15/32*	1,500	10	**504.302**		
16 | *5/8*	180 | *7*	80 | *3*	14 | *9/16*	800	10		**504.333**	
20 | *51/64*	200 | *8*	100 | *4*	18 | *45/64*	800	10		**504.334**	
24 | *15/16*	220 | *8 5/8*	100 | *4*	22 | *7/8*	800	10		**504.335**	
26 | *1 1/32*	250 | *10*	100 | *4*	24 | *15/16*	500	10			**504.346**
28 | *1 7/64*	290 | *11 3/8*	100 | *4*	26 | *1 1/32*	500	10			**504.347**

Bore Hole Cleaning Brushes IBG, Stainless Steel, with Thread

D mm | *inch*	GL mm | *inch*	A mm | *inch*	Suitable for bore hole mm | *inch*	d	Pack.	ROF 0.12 | *0.004"* Art.-No.	ROF 0.15 | *0.006"* Art.-No.	ROF 0.20 | *0.008"* Art.-No.
12 | *15/32*	130 | *5 1/8*	80 | *3*	10 | *25/64*	M 6	10	**504.501.06**		
14 | *9/16*	140 | *5 1/2*	80 | *3*	12 | *15/32*	M 6	10	**504.502.06**		
16 | *5/8*	180 | *7*	80 | *3*	14 | *9/16*	M 6	10	**504.533.06**		
18 | *45/64*	200 | *8*	100 | *4*	16 | *5/8*	M 6	10		*504.532.06*	
20 | *51/64*	200 | *8*	100 | *4*	18 | *45/64*	M 6	10		**504.534.06**	
22 | *7/8*	220 | *8 5/8*	100 | *4*	20 | *51/64*	M 6	10		*504.536.06*	
24 | *15/16*	220 | *8 5/8*	100 | *4*	22 | *7/8*	M 6	10		**504.535.06**	
26 | *1 1/32*	250 | *10*	100 | *4*	24 | *15/16*	M 6	10			**504.546.06**
28 | *1 7/64*	290 | *11 3/8*	100 | *4*	26 | *1 1/32*	M 6	10			**504.547.06**
31 | *1 1/4*	260 | *10 3/8*	100 | *4*	29 | *1 9/64*	M 6	10			*504.548.06*
33 | *1 1/4*	350 | *14*	100 | *4*	31 | *1 1/4*	M 6	10			*504.549.06*
35 | *1 3/8*	350 | *14*	100 | *4*	33 | *1 1/4*	M 6	10			*504.550.06*
38 | *1 1/2*	350 | *14*	100 | *4*	36 | *1 1/2*	M 6	10			*504.551.06*
43 | *2*	350 | *14*	100 | *4*	41 | *1 39/64*	M 6	10			*504.552.06*

Bore Hole Cleaning Brushes
These interior brushes are used in the mounting techniques. The brushes are ideal for cleaning bore holes in most different materials. Afterwards screws and anchors can be inserted easily in the bore hole.

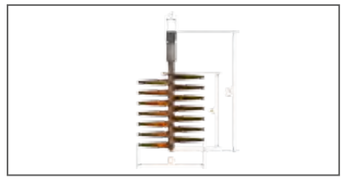

Item Nos. in bold are available ex stock.
Consider our minimum order value for *italic printed* article numbers (see page 164).

STA = steel wire
ROF = stainless steel wire
MES = brass wire

Tube and Sleeve Brushes

Interior Brushes
These brushes are varied for many different uses: not only for cleaning of tubes, gratings, sleeves and cylinders. Interior brushes regulate current velocity in tubing systems. They are similar to the double spiral tube brushes for deburring cross drillings etc. On these pages are shown standard brushes, single spiral having two drilling wires and the double spiral having four.

Sleeve Brushes
Sleeve brushes have a double spiral and are particularly stable types of tube brushes whose trimming is cut to a conical point. Used in machines they are beneficial for cleaning the sleeves (internal threads) of containers, e.g. after galvanisation.

Mechanical Application
Only use the brush with the indicated maximal peripheral speed (RPM max.). The max. RPM only is allowed when the brush is clamped min. for 10 mm into the tool. When the brush is inserted into the suitable work piece, higher RPMs are possible. **Only use the brush right rotating.**

Brushes with doublespiral
Brushes with a double spiral are mainly used for the treatment of larger diameters or for the treatment of hard materials. A double spiral is more stable and has a higher resistance against untwisting. Hence the brushes can be exposed to higher loads.

Stainless Steel Brushes
Information on working on stainless steel you find at www.lessmann.com

Special diameters
Minimum order € 125.00
Extra charge: Gross per piece
10 - 49 pcs + 50 %
50 - 99 pcs + 25 %
100 pcs and more + 10 %

Special threads under reserve
Extra charge: Gross per piece
10 - 19 pcs + € 5.00
20 - 49 pcs + € 4.00
50 - 99 pcs + € 3.00
100 pcs and more + € 2.00

Suitable thread adapter,
see on page 123
Handles and Extension Pieces
see on page 123

On request tube brushes are also available with other measurements, other filling materials or other threads.

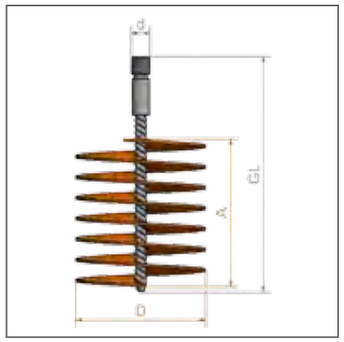

2-sided cropped
on request also 4-sided cropped

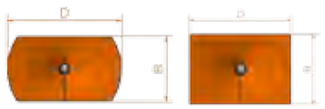

Item Nos. in bold are available ex stock.
Consider our minimum order value for *italic printed* article numbers (see page 164).

STA	= steel wire
ROF	= stainless steel wire
MES	= brass wire
PA	= polyamide
SIC	= silicon carbide bristles

Matching handles can be found on page 123

Tube Brushes with external Thread IBG

D	GL	A	d	RPM	Pack.	1 STA crimped Art.-No.	1 ROF crimped Art.-No.	2 MES crimped Art.-No.	3 PA straight Art.-No.
Single Spirale									
mm | *inch*	mm | *inch*	mm | *inch*							
6 | *15/64*	115 | *4 1/2*	80 | *3*	M 4	2,000	10	**501.301**	**501.501**	**501.701**	**501.801**
8 | *5/16*	115 | *4 1/2*	80 | *3*	M 6	3,000	10	**500.308**	**500.508**	**500.708**	**500.808**
10 | *25/64*	115 | *4 1/2*	80 | *3*	M 6	3,000	10	**500.310**	**500.510**	**500.710**	**500.810**
12 | *15/32*	115 | *4 1/2*	80 | *3*	M 6	3,000	10	**500.312**	**500.512**	**500.712**	**500.812**
13 | *33/64*	115 | *4 1/2*	80 | *3*	M 6	3,000	10	**500.313**	**500.513**	**500.713**	**500.813**
14 | *9/16*	115 | *4 1/2*	80 | *3*	M 6	3,000	10	**500.314**	**500.514**	**500.714**	**500.814**
15 | *19/32*	115 | *4 1/2*	80 | *3*	M 6	3,000	10	**500.315**	**500.515**	**500.715**	**500.815**
16 | *5/8*	115 | *4 1/2*	80 | *3*	M 6	3,000	10	**500.316**	**500.516**	**500.716**	**500.816**
18 | *45/64*	115 | *4 1/2*	80 | *3*	M 6	3,000	10	**500.318**	**500.518**	**500.718**	**500.818**
19 | *3/4*	115 | *4 1/2*	80 | *3*	M 6	3,000	10	**500.319**	**500.519**	**500.719**	**500.819**
20 | *51/64*	115 | *4 1/2*	80 | *3*	M 6	3,000	10	**500.320**	**500.520**	**500.720**	**500.820**

4 Interior Brushes with external thread IBG, Silicon Carbid Bristles

D	GL	A	d	RPM	Pack.	SIC 180/0.9 Art.-No.
Single Spirale						
mm | *inch*	mm | *inch*	mm | *inch*				
10 | *25/64*	115 | *4 1/2*	80 | *3*	M 6	4,000	10	*500.010*
16 | *5/8*	115 | *4 1/2*	80 | *3*	M 6	4,000	10	*500.016*
20 | *51/64*	150 | *6*	100 | *4*	W 1/2"	3,500	10	**502.050.24**
22 | *7/8*	150 | *6*	100 | *4*	W 1/2"	3,500	10	*502.052.24*
25 | *1*	150 | *6*	100 | *4*	W 1/2"	3,500	10	*502.055.24*
28 | *1 7/64*	150 | *6*	100 | *4*	W 1/2"	3,500	10	*502.058.24*

For all brushes with thread M 6, M 10, W 1/2" and W 3/8" a practical hanger assembly is available for presenting the brushes individually. More information you find on page 133.

Tube/Sleeve brushes

Matching handles can be found on page 123

Tube Brushes with external Thread W 1/2"

				1	2	3	4	5	
				Single Spirale IBG				Double Spirale IBGD	
D	GL	A	Pack.	RPM	STA straight	ROF straight	MES crimped	PA straight	RPM	STA straight
mm	mm	mm	mm	max.	Art.-No.	Art.-No.	Art.-No.	Art.-No.	max.	Art.-No.
20	150	100	10	2,500	**502.120.24**	**502.420.24**	**502.720.24**	**502.820.24**	2,000	**522.120.24**
22	150	100	10	2,500	**502.122.24**	**502.422.24**	**502.722.24**	**502.822.24**	2,000	**522.122.24**
25	150	100	10	2,500	**502.125.24**	**502.425.24**	**502.725.24**	**502.825.24**	2,000	**522.125.24**
28	150	100	10	2,500	**502.128.24**	**502.428.24**	**502.728.24**	*502.828.24*	2,000	**522.128.24**
30	160	100	10	1,000	**506.130**	**506.430**	**506.730**	**506.830**	1,500	**526.130**
32	160	100	10	1,000	**506.132**	**506.432**	**506.732**	**506.832**	1,500	**526.132**
35	160	100	10	1,000	**506.135**	**506.435**	**506.735**	**506.835**	1,500	**526.135**
38	160	100	10	1,000	**506.138**	**506.438**	**506.738**	**506.838**	1,500	**526.138**
40	160	100	10	1,000	**506.140**	**506.440**	**506.740**	**506.840**	1,500	**526.140**
44	160	100	5	1,000	**506.144**	**506.444**	**506.744**	**506.844**	1,500	**526.144**
50	160	100	5	1,000	**506.150**	**506.450**	**506.750**	**506.850**	1,500	**526.150**
57	160	100	5	1,000	**506.157**	**506.457**	**506.757**	**506.857**	1,500	**526.157**
63	160	100	5	1,000	**506.163**	**506.463**	**506.763**	**506.863**	1,500	**526.163**
69	160	100	5	1,000	**506.169**	***506.469***	**506.769**	**506.869**	1,500	**526.169**
75	160	100	5	1,000	**506.175**	**506.475**	**506.775**	**506.875**	1,500	**526.175**
82	160	100	5	1,000	**506.182**	**506.482**	**506.782**	**506.882**	1,500	**526.182**
88	160	100	5	1,000	**506.188**	*506.488*	*506.788*	**506.888**	1,500	**526.188**
94	160	100	5	1,000	**506.194**	*506.494*	*506.794*	**506.894**	1,500	**526.194**
101	160	100	5	1,000	**506.101**	**506.401**	**506.701**	**506.801**	1,500	**526.101**
125	160	100	5	1,000	**506.106**	**506.406**	**506.706**	*506.806*	1,500	**526.106**
150	160	100	5	1,000	**506.211**	**506.411**	**506.711**	**506.811**	1,000	*526.111*
200	160	100	5	1,000	**506.220**	available on demand	*506.720*	**506.820**	1,000	available on demand

Mechanical Application
Only use the brush with the indicated maximal peripheral speed (RPM max.). The max. RPM only is allowed when the brush is clamped min. for 10 mm into the tool. When the brush is inserted into the suitable work piece, higher RPMs are possible. **Only use the brush right rotating.**

Item Nos. in bold are available ex stock.
Consider our minimum order value for *italic printed* article numbers (see page 164).

STA = steel wire
ROF = stainless steel wire
MES = brass wire
PA = polyamide

Tube Brushes with internal Thread / Boiler Brushes IBG

	B	D	Format	GL	A	d	RPM	Pack.	STA straight	PA straight
	mm | *inch*	mm | *inch*		mm | *inch*	mm | *inch*		max.		Art.-No.	Art.-No.
	Single Spirale									
1		30 | *1 3/16*	round	160 | *6 1/4*	100 | *4*	M 10i	1,000	10	*506.130.60*	
		40 | *1 5/8*	round	160 | *6 1/4*	100 | *4*	M 10i	1,000	10	*506.140.60*	
		50 | *2*	round	160 | *6 1/4*	100 | *4*	M 10i	1,000	10	*506.150.60*	
		60 | *2 3/8*	round	160 | *6 1/4*	100 | *4*	M 10i	1,000	10	*506.160.60*	
		80 | *3*	round	160 | *6 1/4*	100 | *4*	M 10i	1,000	10	*506.180.60*	
		90 | *3 1/2*	round	160 | *6 1/4*	100 | *4*	M 10i	1,000	10	**507.190**	
		101 | *4*	round	160 | *6 1/4*	100 | *4*	M 10i	1,000	10	*506.101.60*	
		120 | *4 3/4*	round	160 | *6 1/4*	100 | *4*	M 10i	1,000	10	**507.105**	*506.805.60*
2	20 | *51/64*	30 | *1 3/16*	2-sided cropped	140 | *5 1/2*	80 | *3*	M 10i		10	**533.405**	
	15 | *19/32*	30 | *1 3/16*	2-sided cropped	160 | *6 1/4*	100 | *4*	M 10i		10	*533.408*	
	30 | *1 3/16*	50 | *2*	2-sided cropped	160 | *6 1/4*	100 | *4*	M 10i		10	*532.218.60*	
	40 | *1 5/8*	90 | *3 1/2*	2-sided cropped	160 | *6 1/4*	100 | *4*	M 10i		10	*532.214.60*	
	50 | *2*	100 | *4*	2-sided cropped	160 | *6 1/4*	100 | *4*	M 10i		10	*532.303.60*	

Suitable back board brushes you find at page 121.

round | 2-sided cropped | on request also 4-sided cropped

Sleeves Brushes Conical, without Thread

	D	GL	A	RPM	Pack.	Single Spirale IBE	Double Spirale IBD
						STA crimped	STA straight
	mm | *inch*	mm | *inch*	mm | *inch*	max.		Art.-No.	Art.-No.
3	10-20 | *25/64 - 51/64*	170 | *6 3/4*	100 | *4*	1,000	10	**541.372**	**549.101**
	15-25 | *19/32 - 1*	170 | *6 3/4*	100 | *4*	1,000	10	**540.321**	**549.102**
	20-30 | *51/64 - x 1 3/16*	170 | *6 3/4*	100 | *4*	1,000	10	**541.373**	**549.103**
	25-35 | *1 - 1 3/8*	170 | *6 3/4*	100 | *4*	1,000	10	**540.323**	**549.104**
	32-42 | *1 17/64 -1 5/8*	170 | *6 3/4*	100 | *4*	1,000	5	**540.324**	**549.105**
	40-50 | *1 5/8 - 2*	170 | *6 3/4*	100 | *4*	1,000	5	**540.325**	**549.106**
	38-70 | *1 1/2 - 2 3/4*	170 | *6 3/4*	100 | *4*	1,000	5	*540.225*	**549.107**
	60-95 | *2 3/8 - 3 3/4*	170 | *6 3/4*	100 | *4*	1,000	5	**540.327**	**549.108**

On request also tube and sleeve brushes with crimped wire are available.

Boiler Brushes / Stove Pipe Brushes

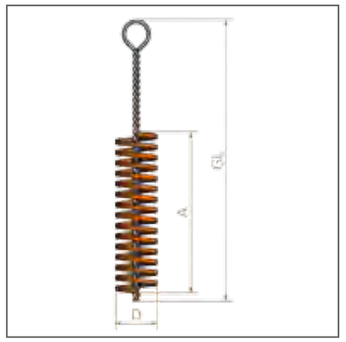

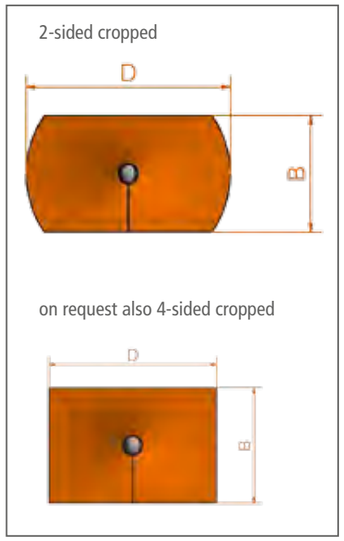

Boiler Brushes
The systematic care of boilers and regular cleaning by brushing increases the boiler efficiency and reduces toxic emissions.

LESSMANN boiler brushes are of outstanding quality made using the best materials and precise manufacturing procedures. Our current programme includes brushes in standard dimensions and special executions. As OEM supplier to important boiler manufacturers we are able to produce large quantities in an efficient way. What is even more important is our know how in meeting the critical tolerances demanded by our customers.

Stove Pipe Brushes
The stove pipe brushes are available in two different executions: with twisted handle (brush and handle one part) or with external thread, for screwing and lengthing by using a separate handle.

Handles and Extension Pieces
For tube brushes, boiler brushes and stove pipe brushes, see pages 115 - 117, 118 - 122. The twisted handles have an internal thread and a grip loop, the extension pieces have both an internal thread and an external thread.

Suitable Thread Adapters
see page 123

Item Nos. in bold are available ex stock.
Consider our minimum order value for *italic printed* article numbers (see page 164).

STA = steel wire
PA = polyamide

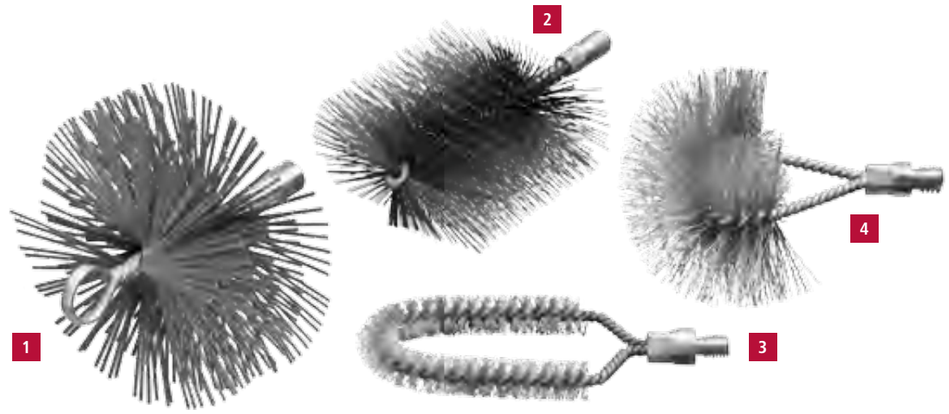

EAN **1 Chimney Brushes with Eye and internal Thread IBZG, Flat Wire 2.0 x 0.40**

Filling	D	GL	A	Internal Thread d	Pack	Art.-No.
STA flat	125	160	55	M 12 i	1	**507.007**
STA flat	150	160	55	M 12 i	1	**507.001**
STA flat	175	160	55	M 12 i	1	**507.002**
STA flat	200	160	55	M 12 i	1	**507.003**

Filling	D	GL	A	Internal Thread	Pack	Art.-No.
STA flat	250	160	55	M 12 i	1	**507.004**
STA flat	300	160	55	M 12 i	1	**507.005**
STA flat	350	160	55	M 12 i	1	**507.006**

Boiler Brushes with external Thread IBG, Steel Wire, rectangular/curved

	Filling	B mm | *inch*	D mm | *inch*	Format	GL mm | *inch*	A mm | *inch*	d	Pack.	Art.-No.
2	**PA** straight	30 | *1 3/16*	50 | *2*	(·)	160 | *6 3/8*	100 | *4*	W 1/2"	5	**533.008.24**
2	**PA** straight	50 | *2*	100 | *4*	(·)	160 | *6 3/8*	100 | *4*	W 1/2"	5	*533.010.24*
2	**STA** straight	30 | *1 3/16*	50 | *2*	(·)	160 | *6 3/8*	100 | *4*	W 1/2"	5	**532.218**
2	**STA** straight	30 | *1 3/16*	80 | *3*	(·)	160 | *6 3/8*	100 | *4*	W 1/2"	5	**532.211**
2	**STA** straight	40 | *1 5/8*	80 | *3*	(·)	160 | *6 3/8*	100 | *4*	W 1/2"	5	**532.202**
2	**STA** straight	50 | *2*	100 | *4*	(·)	160 | *6 3/8*	100 | *4*	W 1/2"	5	**532.203**
2	**STA** straight	50 | *2*	120 | *4 3/4*	(·)	160 | *6 3/8*	100 | *4*	W 1/2"	5	**532.205**
3	**STA** crimped	18 | *45/64*	70 | *2 3/4*	curved	160 | *6 3/8*	100 | *4*	W 1/2"	5	**529.301.24**
3	**STA** crimped	30 | *1 3/16*	80 | *3*	curved	175 | *6 7/8*	120 | *4 3/4*	W 1/2"	5	**529.302**
4	**STA** crimped	80 | *3*	150 | *6*	curved	150 | *6*	120 | *4 3/4*	W 1/2"	5	**529.311**
4	**PA** straight	80 | *3*	150 | *6*	curved	150 | *6*	120 | *4 3/4*	W 1/2"	5	*529.811*
4	**STA** crimped	80 | *3*	150 | *6*	curved	150 | *6*	120 | *4 3/4*	M 10i	5	*529.311.60*

(·) 2-sided cropped
on request also 4-sided cropped

Boiler Brushes

1 2 3

Boiler Brushes with Handle IBE

	Filling	B mm | *inch*	D mm | *inch*	Format	GL mm | *inch*	A mm | *inch*	Pack.	Art.-No.
1	**PA** straight		20 | *51/64*	⊙	600 | *23 5/8*	100 | *4*	10	**544.804**
	STA crimped		50 | *2*	⊙	700 | *27 1/2*	100 | *4*	10	**544.301**
	STA crimped		90 | *3 1/2*	⊙	600 | *23 5/8*	100 | *4*	10	**544.302**
	STA crimped		10 | *25/64*	⊙	850 | *33 1/2*	100 | *4*	10	**545.320**
	STA crimped		15 | *19/32*	⊙	850 | *33 1/2*	100 | *4*	10	*545.321*
2	**STA** crimped		20 | *51/64*	⊙	850 | *33 1/2*	100 | *4*	10	**545.322**
	STA crimped		25 | *1*	⊙	850 | *33 1/2*	100 | *4*	10	**545.307**
	STA crimped		35 | *1 3/8*	⊙	850 | *33 1/2*	100 | *4*	10	**545.311**
	STA crimped		50 | *2*	⊙	850 | *33 1/2*	100 | *4*	10	**545.312**
	STA crimped		60 | *2 3/8*	⊙	850 | *33 1/2*	100 | *4*	10	**545.338**
	PA straight	12 | *15/32*	14 | *9/16*	⊙	600 | *23 5/8*	150 | *6*	10	**554.903**
	STA straight	17 | *43/64*	50 | *2*	⊙	960 | *38*	60 | *2 3/8*	10	**564.101****
	STA crimped	30 | *1 3/16*	50 | *2*	⊙	800 | *31 1/2*	100 | *4*	10	**551.801**
3	**STA** crimped	40 | *1 5/8*	50 | *2*	⊙	1,000 | *39 3/8*	80 | *3*	10	**553.711**
	STA straight	40 | *1 5/8*	80 | *3*	⊙	1,000 | *39 3/8*	100 | *4*	10	**552.404**
	STA crimped	40 | *1 5/8*	90 | *3 1/2*	⊙	1,000 | *39 3/8*	80 | *3*	10	*564.301**
	STA straight	50 | *2*	100 | *4*	⊙	1,000 | *39 3/8*	100 | *4*	10	**552.403**

* Rod made from spring steel 5 Ø | ** with scooped scratcher in the handle

⊙ 2-sided cropped | on request also 4-sided cropped

⊙ round

Item Nos. in bold are available ex stock.
Consider our minimum order value for *italic printed* article numbers (see page 164).

STA = steel wire
PA = polyamide

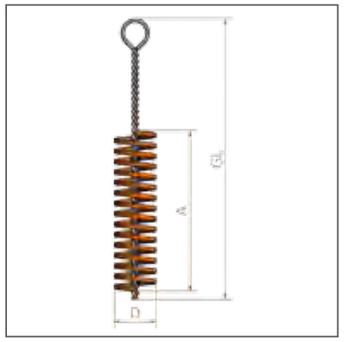

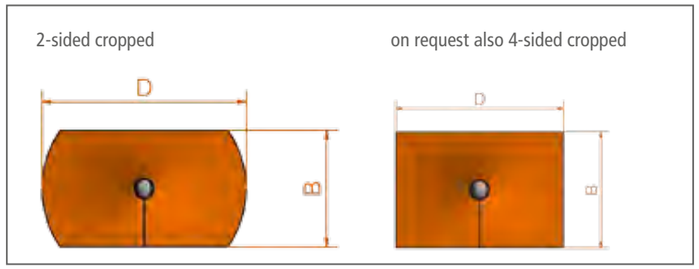

Boiler Brushes-Sets

1 2

EAN **1 Brush Set, 5 pieces**

Content: 1 piece each	A	Format	Set with handle, big edition, steel wire: Art.-No.	B	D	GL	Art.-No. Set	Set with handle, small edition, steel wire: Art.-No.	B	D	GL	Art.-No. Set
Cylinder Brush	100	⊙	545.303		38	1.000	**599.921**	544.307		15	600	**599.931**
Cylinder Brush	100	⊙	545.331		100	1.000		544.361		25	800	
Boiler Brush	100	⊙	552.811	30	70	1.000		559.831	31	20	600	
Boiler Brush	100	⊙	552.816	50	100	1.000		551.811	30	20	500	
Boiler Brush	100	flat filament	559.713	75	30	1.000		551.812	50	40	700	

EAN **2 Brush Set, Steel Wire, external Thread W 1/2", crimped, 9 pieces**

Content: 1 piece each		B mm | *inch*	D mm | *inch*	GL mm | *inch*	A mm | *inch*	Format	Art.-No. Set
506.330	Interior Brushes		30 | *1 3/16*	160 | *6 1/4*	100 | *4*	⊙	**599.962**
506.340	Interior Brushes		40 | *1 5/8*	160 | *6 1/4*	100 | *4*	⊙	
506.363	Interior Brushes		63 | *2 1/2*	160 | *6 1/4*	100 | *4*	⊙	
532.718	Boiler Brush	30 | *1 3/16*	50 | x *2*	160 | *6 1/4*	100 | *4*	⊙	
532.716	Boiler Brush	30 | *1 3/16*	90 | *3 1/2*	160 | *6 1/4*	100 | *4*	⊙	
532.703	Boiler Brush	50 | *2*	100 | *4*	160 | *6 1/4*	100 | *4*	⊙	
529.311	Back board brush	80 | *3*	150 | *6*	150 | *6*			
567.671	Handle with Eye			500 | *20*			
567.771	Extension			500 | *20*			

EAN **Brush Set, Polyamide Bristles, external Thread W 1/2", crimped, 9 pieces**

Content: 1 piece each		B mm | *inch*	D mm | *inch*	GL mm | *inch*	A mm | *inch*	Format	Art.-No. Set
506.838	Interior Brushes		38 | *1 1/2*	160 | *6 1/4*	100 | *4*	⊙	**599.991**
506.855	Interior Brushes		55 | *2 1/4*	160 | *6 1/4*	100 | *4*	⊙	
506.860	Interior Brushes		60 | *2 3/8*	160 | *6 1/4*	100 | *4*	⊙	
533.008.24	Boiler Brush	30 | *1 3/16*	50 | *2*	160 | *6 1/4*	100 | *4*	⊙	
533.009.24	Boiler Brush	30 | *1 3/16*	90 | *3 1/2*	160 | *6 1/4*	100 | *4*	⊙	
533.010.24	Boiler Brush	50 | *2*	100 | *4*	160 | *6 1/4*	100 | *4*	⊙	
529.811	Back board brush	80 | *3*	150 | *6*	150 | *6*			
567.671	Handle with Eye			500 | *20*			
567.771	Extension			500 | *20*			

Stove Pipe Brushes

Stove Pipe Brushes with Twisted Handle IBZ

	Filling	D mm | *inch*	GL mm | *inch*	A mm | *inch*	Pack.	Art.-No.
1	**STM**	130 | *5 1/8*	2,000 | *78 3/4*	200 | *8*	10	**546.302**
1	**STM**	130 | *5 1/8*	3,000 | *118*	200 | *8*	10	**546.304**
1	**STM**	150 | *6*	2,000 | *78 3/4*	200 | *8*	10	**546.306**
1	**STM**	180 | *7*	2,000 | *78 3/4*	200 | *8*	10	**546.314**
1	**STM**	200 | *8*	2,000 | *78 3/4*	200 | *8*	10	**546.318**
2	**BAS**	150 | *6*	2,000 | *78 3/4*	200 | *8*	10	**546.906**
2	**BAS**	150 | *6*	3,000 | *118*	200 | *8*	10	**546.908**

Delivery only in noted packaging unit. If you need smaller quantities, please order stove pipe brushes with separate handle.

3 Stove Pipe Brushes with external thread, separate Handle IBZG

Filling	D mm | *inch*	GL mm | *inch*	A mm | *inch*	d	Pack.	Art.-No.
STM	80 | *3*	275 | *10 7/8*	200 | *8*	M 10	5	**507.307**
STM	100 | *4*	275 | *10 7/8*	200 | *8*	M 10	5	**507.308**
STM	130 | *5 1/8*	275 | *10 7/8*	200 | *8*	M 10	5	**507.301**
STM	150 | *6*	275 | *10 7/8*	200 | *8*	M 10	5	**507.302**
STM	160 | *6 3/8*	275 | *10 7/8*	200 | *8*	M 10	5	**507.303**
STM	180 | *7*	275 | *10 7/8*	200 | *8*	M 10	5	**507.304**
STM	200 | *8*	275 | *10 7/8*	200 | *8*	M 10	5	**507.305**
BAS	150 | *6*	275 | *10 7/8*	200 | *8*	M 10	5	**507.959**

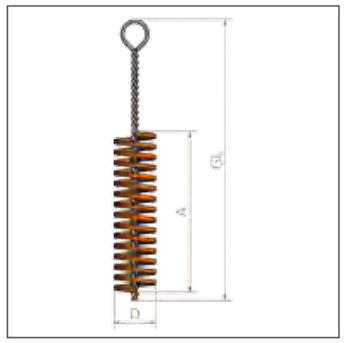

Item Nos. in bold are available ex stock.
Consider our minimum order value for *italic printed* article numbers (see page 164).

STM = brass coated steel
BAS = bassine black

Accessories

Handle with Eye

	GL mm | *inch*	d	Format	Pack.	Art.-No.
1	400 | *16*	External M 10	round steel, straight	1	**568.805**
1	800 | *31 1/2*	External M 10	round steel, straight	1	**568.802**
1	1,000 | *40*	External M 10	round steel, straight	1	**568.806**
EAN 2	1,000 | *40*	Internal M 4	twisted wire	1	**566.603**
EAN 2	1,000 | *40*	Internal M 6	twisted wire	1	**566.601**
EAN 2	1,000 | *40*	Internal M 10	twisted wire	1	**566.602**
EAN 2	1,000 | *40*	External M 12	twisted wire	1	**567.201**
2	500 | *20*	Internal W 1/2"	twisted wire	1	**567.671**
EAN 2	1,000 | *40*	Internal W 1/2"	twisted wire	1	**567.601**

3 Extension

	GL mm | *inch*	d	Format	Pack.	Art.-No.
EAN	1,000 | *40*	Internal / External M 4	twisted wire	1	**566.703**
EAN	200 | *8*	Internal / External M 6	twisted wire	1	**566.707.01**
EAN	1,000 | *40*	Internal / External M 6	twisted wire	1	**566.701**
EAN	1,000 | *40*	Internal / External M 10	twisted wire	1	**566.702**
EAN	1,000 | *40*	Internal / External M 12	twisted wire	1	**567.731**
	500 | *20*	Internal / External W 1/2"	twisted wire	1	**567.771**
EAN	1,000 | *40*	Internal / External W 1/2"	twisted wire	1	**567.701**

EAN **Adapter Threads**

			GL mm | *inch*	Pack.	Art.-No.
4	Internal W 1/2"	Internal M 12	40 | *1 3/8*	1	**001.211**
4	Internal W 1/2"	Internal M 10	40 | *1 3/8*	1	**001.212**
4	Internal W 3/8"	Internal M 10	40 | *1 3/8*	1	*001.215*
4	External M 10	Internal W 1/2"	40 | *1 3/8*	1	**001.222**
4	External M 10	Internal W 3/8"	40 | *1 3/8*	1	**001.225**
5	Internal W 1/2"	Shank Ø 6 mm	50 | *2*	1	**000.071**
5	Internal M 6	Shank Ø 6 mm	50 | *2*	1	**000.072**
6	Internal W 1/2"		155 | *6*	1	**599.002**
6	Internal M 6		130 | *5 1/8*	1	**599.001**

Fitting Brushes

EAN

Interior Fitting Brushes IBM

D mm | *inch*	GL	A	Filling Material	Pack.	Art.-No.
8 | *5/16*	185	12	**ROF** 0.10 | *0.004"*	10	**562.508**
10 | *25/64*	185	12	**ROF** 0.10 | *0.004"*	10	**562.510**
12 | *15/32*	185	15	**ROF** 0.10 | *0.004"*	10	**562.512**
15 | *19/32*	185	20	**ROF** 0.15 | *0.006"*	10	**562.515**
18 | *45/64*	185	20	**ROF** 0.15 | *0.006"*	10	**562.518**
22 | *7/8*	185	25	**ROF** 0.20 | *0.008"*	10	**562.522**
28 | *1 7/64*	185	25	**ROF** 0.20 | *0.008"*	10	**562.528**
35 | *1 3/8*	185	25	**ROF** 0.20 | *0.008"*	10	**562.535**

Fitting Brushes
With designed two-components handle
For the inner cleaning in tubes in gas, water and climatic conditions. We use only stainless steel wire as the filling material for these brushes. This prevents long-term damage by material deposit in tubes.

Recommendation for users: When using interior fitting brushes, please only use brushes with stainless steel wire. This will avoid pitting by the use of rusting wire parts.

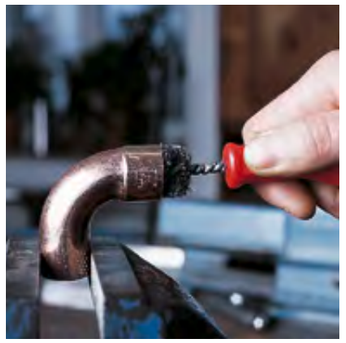

Item Nos. in bold are available ex stock.
Consider our minimum order value for *italic printed* article numbers (see page 164).

STA = steel wire
ROF = stainless steel wire
PP = polyprophylene

Brushes and Scratcher

1 Battery Terminal Brushes

Filling Material	D mm | *inch*	GL mm | *inch*	A mm | *inch*	Pack.	Art.-No.
STA	17+24 | *43/64+15/16*	120/180 | *4 3/4 / 7*	50 | *2*	12	**563.301***

2 Soluble Oil Brushes

Filling Material	Ø Bundle mm | *inch*	GL mm | *inch*	H mm | *inch*	Pack.	Art.-No.
mixed hair	7 | *9/32*	150 | *6*	40 | *1 5/8*	100	**570.907**
mixed hair	10 | *25/64*	240 | *9 1/2*	55 | *2 1/4*	100	**570.910**

3 Soldering Fluid Brushes

Filling Material	D mm | *inch*	GL mm | *inch*	H mm | *inch*	Pack.	Art.-No.
bristles	10 | *25/64*	123 | *4 7/8*	20 | *51/64*	100	**045.910**
bristles	15 | *19/32*	140 | *5 1/2*	25 | *1*	100	**045.915**
STA	20 | *51/64*	205 | *8 5/64*	30 | *1 1/4*	100	**045.301**

4 Rust Scratcher

Filling Material	D mm | *inch*	GL mm | *inch*	H mm | *inch*	Pack.	Art.-No.
STA straight 0.23	5/8 | *13/64 / 5/16*	100 | *4*	6 | *15/64*	180	**184.101**
STA Straight 0.23 | *0.009"* + **PP** 0.15 | *0.006"*	5/8 | *13/64 / 5/16*	100 | *4*	6 +15 | *15/64 + 19/32*	180	*184.104*

* conical filling

5 End Brush mutual filled

	D mm | *inch*	GL mm | *inch*	H mm | *inch*	Pack.	Art.-No.
ROF straight 0.30 + **spring steel strip** 6.4 x 0.8	15 | *19/32*	180 | *7*	22/25 | *7/8/1*	100	*184.412*

Battery Terminal Brushes
For cleaning of battery terminals. The twisted brush is conical filled for cleaning connection terminals of the battery cable. To clean the battery terminals use the ringshaped filed cards stuck in the handle.

Soluble Oil Brushes
With twisted wire handle for workshop use.

Soldering Fluid Brushes
The handle is made of tinned metal.

End brush with double-sided filling
End brushes with double-sided filling can be used for the manual removement of zinc ash without harming the zinc surface. Zinc ash is the result of oxidation on the surface of zinc baths. This happens usually on the edges of steelgirders with head and base plates.
The spring steel strip on the one end of the end brush is used to remove more solid parts of dirt, whereas the with stainless steel wire filled other side of the brush can be used to remove the remaining dirt.

LESSMANN®
THE GERMAN BRUSH COMPANY

D.I.Y. BRUSHES AND SALES PROMOTION

Do It Yourself Brushes

D.I.Y Brushes with Shank
Do It Yourself brushes are an excellent alternative to the professional tools previously shown in this catalogue. Available are cup brushes from diameter 50 - 75 mm, wheel brushes diameter 50 - 100 mm, end brushes and cylinder brushes.

Stainless Steel Brushes
Information on working on stainless steel you find at www.lessmann.com

Attractive assortment
Coarse and fine steel wire, brass wire and abrasive filaments are available as filling materials.

The brushes are packed in small display cartons, 10 pieces per carton.

We offer different packaging to present these and other common brushes with shanks in specialist shops.

Item Nos. in bold are available ex stock.
Consider our minimum order value for *italic printed* article numbers (see page 164).

STA	= steel wire, crimped
ROF	= stainless steel wire
MES	= brass wire, crimped
SIC	= brass wire

1 Wheel Brushes with Shank 6 mm Ø

D mm | *inch*	A mm | *inch*	RPM max.	Pack.	**STA 0.20** | *0.008"* Art.-No.	**STA 0.30** | *0.012"* Art.-No.	**ROF 0.20** | *0.008"* Art.-No.	**ROF 0.30** | *0.012"* Art.-No.
50 | *2*	8-10 | *3/8*	4,500	10	**410.122**	**410.123**		
75 | *3*	8-10 | *3/8*	4,500	10	**410.132**	**410.133**	**410.134**	**410.135**
75 | *3*	14-16 | *5/8*	4,500	10		**410.173**		
100 | *4*	8-10 | *3/8*	4,500	10	**410.152**	**410.153**	**410.154**	**410.155**
100 | *4*	14-16 | *5/8*	4,500	10		**410.183**		**410.185**

						2	
D mm | *inch*	A mm | *inch*	RPM max.	Pack.	**MES 0.20** | *0.008"* Art.-No.	**MES 0.25** | *0.010"* Art.-No.	**SIC 80/1.2** Art.-No.	**SIC 180/0.9** Art.-No.
75 | *3*	8-10 | *3/8*	4,500	10		**410.136**	**410.138**	
100 | *4*	8-10 | *3/8*	4,500	10	**410.156**		**410.158**	*410.159*

3 Cup Brushes with Shank 6 mm Ø

D mm | *inch*	RPM max.	Pack.	**STA 0.20** | *0.008"* Art.-No.	**STA 0.30** | *0.012"* Art.-No.	**ROF 0.20** | *0.008"* Art.-No.	**ROF 0.30** | *0.012"* Art.-No.
50 | *2*	4,500	10	**430.122**	**430.123**	**430.124**	**430.125**
75 | *3*	4,500	10	**430.132**	**430.133**	**430.134**	**430.135**

				4	
D mm | *inch*	RPM max.	Pack.	**MES 0.30** | *0.012"* Art.-No.	**SIC 80/1.2** Art.-No.	**SIC 320/0.6** Art.-No.
50 | *2*	4,500	10	**430.126**	**430.128**	**430.129**
75 | *3*	4,500	10	**430.136**	**430.138**	**430.139**

5 End Brushes with Shank 6 mm Ø

D mm | *inch*	RPM max.	Pack.	**STA 0.30** | *0.012"* Art.-No.	**SIC 80/1.2** Art.-No.
25 | *1*	12,000	10	**455.161**	**453.821**

6 Cylinder Brushes with Shank 6 mm Ø

D mm | *inch*	RPM max.	Pack.	**STA 0.30** | *0.012"* Art.-No.
28 | *1*	1,500	10	**541.301**

7 D.I.Y. Wheel Brushes with bore

D mm | *inch*	A mm | *inch*	d	RPM max.	Pack.	**STA 0.35** | *0.014"* Art.-No.
75 | *3*	10 | *3/8*	1/2"	4,500	10	**300.102**
100 | *4*	10 | *3/8*	1/2"	4,500	10	**320.102**

Packing and Sales Promotion

Brushes with blister packing
All standard brushes for drilling machines and angle grinders are available with blister packing. The blister packing is available with attractive labels with information about technical data and EAN-bar code. The clam shells emphasize the brushes' value, protect them and provide good visible presentation.

On request we can arrange your individual private label solution.

Technical data on front, details and EAN on back: Blister Packing

EAN

Brushes for Angle Grinders in Blister Packaging

	D	Thread	**STH 0.35** | *0.014"*	**STH 0.50** | *0.020"*	**ROH 0.30** | *0.012"*	**ROH 0.50** | *0.020"*	**STA 0.35** | *0.014"*
	mm | *inch*	mm | *inch*	Art.-No.	Art.-No.	Art.-No.	Art.-No.	Art.-No.
Knot Cup Brushes	65 | *2 1/2*	M 14	*482.117.09*	*482.217.09*		*482.817.09*	
	65 | *2 1/2*	M 10		*482.214.09*			
Knot Wheel Brushes	115 | *4 1/2*	Bo. 22.2 | *7/8*		*472.211.09*		*472.811.09*	
	115 | *4 1/2*	M 14		*472.217.09*			
Knot Bevel Brushes	100 | *4*	M 14		*471.257.09*			
	115 | *4 1/2*	M 14		*472.257.09*		*472.857.09*	
Cup Brushes crimped	60 | *2 3/8*	M 14			*421.367.09*		*421.167.09*
	60 | *2 3/8*	M 10					*421.164.09*
	75 | *3*	M 14					*423.167.09*
Conical Brushes crimped	100 | *4*	M 14					*422.177.09*

EAN

Brushes for Grinders and Drilling Machines with Shank 6 mm Ø in Blister Packaging

	D	**STH 0.35** | *0.014"*	**STH 0.50** | *0.020"*	**ROH 0.35** | *0.014"*
	mm | *inch*	Art.-No.	Art.-No.	Art.-No.
Knot End Brushes	19 | *3/4*	*453.278.09*		
	22 | *7/8*			*454.378.09*
Knot Wheel Brushes	75 | *3*		*417.198.09*	

EAN

D.I.Y. Brushes for Grinders and Drilling Machines with Shank 6 mm Ø in Blister Packaging

	D	**STA 0.25** | *0.010"*	**STA 0.30** | *0.012"* **0.35** | *0.014"*	**ROF 0.30** | *0.012"*	**MES 0.25** | *0.010"*	**SIC 80/1.2**
	mm | *inch*	Art.-No.	Art.-No.	Art.-No.	Art.-No.	Art.-No.
Wheel Brushes	50 | *2*		*410.123.09*			
	75 | *3*		*410.133.09*	*410.135.09*	*410.136.09*	*410.138.09*
	100 | *4*	*410.152.09*	*410.153.09*			*410.158.09*
Cup Brushes	50 | *2*	*430.122.09*	*430.123.09*		*430.126.09*	*430.128.09*
	75 | *3*		*430.133.09*			*430.138.09*
End Brushes	25 | *1*		*455.161.09*			
Cylinder Brushes	28 | *1*		*541.301.09*			

Presentation „Cut Case" Carton

Cut Cases for presenting the products
Cut Cases are a simple alternative for presenting brushes in large quantities. The Products can be inserted in the self-service wall modularly.

Item Nos. in bold are available ex stock.
Consider our minimum order value for *italic printed* article numbers (see page 164).

STA	= steel wire, crimped
STH	= steel wire, high tensile, straight
ROF	= stainless steel wire
ROH	= stainless steel wire, high tensile, straight
MES	= brass wire
PA	= polyamide
PP	= polypropylene
SIC	= brass wire

EAN

Brushes in Cut Cases

Description	Filling material			Pack.	Carton size	Art.-No.
File Cleaner	**STA** straight 0.30	250 x 40		10	1	**037.201.CC**
Hand Brush	**STA** straight 0.35	2 Rows		10	1	**100.021.CC**
Hand Brush	**STA** straight 0.35	3 Rows		10	1	**100.031.CC**
Hand Brush	**STA** straight 0.35	4 Rows		10	1	**100.041.CC**
Hand Brush	**STA** straight 0.35	5 Rows		8	1	**100.051.CC**
Hand Brush	**STA** straight 0.35	6 Rows		8	1	**100.061.CC**
Hand Brush	**ROF** crimped 0.35	3 Rows		10	1	**104.631.CC**
Hand Brush	**ROF** crimped 0.35	4 Rows		10	1	**104.641.CC**
Hand Brush	**MES** crimped 0.35	3 Rows		10	1	**107.631.CC**
Hand Brush	**MES** crimped 0.35	4 Rows		10	1	**107.641.CC**
Hand Brush	**STA** straight 0.35	4 Rows	with Scraper	8	1	**120.401.CC**
Rivet Brush	**STA** straight 0.35	3 Rows	V-shaped	8	1	**120.801.CC**
Rivet Brush	**ROF** straight 0.35	3 Rows	V-shaped	8	1	**120.811.CC**
Duster	**PP** straight 0.40	4 Rows		6	2	**124.801.CC**
Spark Plug Brush	**MES** crimped 0.15	3 Rows		25	1	**125.211.CC**
Fine Scratch Brush	**MES** crimped 0.15	4 Rows		15	1	**126.411.CC**
Fine Scratch Brush	**PA** straight 0.30	4 Rows		15	1	**126.451.CC**
Staining Brush	**MES** crimped 0.15	7 Rows		6	1	**144.001.CC**
Staining Brush	Leather/Fibre	3/7 Rows		4	1	**144.701.CC**
Professional Hand Brush	**STA** straight 0.35	2 Rows	2 Components Handle	10	1	**182.401.CC**
Professional Hand Brush	**ROF** straight 0.35	2 Rows	2 Components Handle	10	1	**182.421.CC**
Professional Hand Brush	**MES** crimped 0.25	2 Rows	2 Components Handle	10	1	**182.451.CC**
Hand Brush with Plastic Handle	**ROF** crimped 0.35	3 Rows		10	1	**185.431.CC**
Wheel Brush with Plastic Body	**SIC** K 80 / 1.2	7 Rows	Thread M 14	2	1	**402.880.CC**
Disc Brush with Plastic Body	**SIC** K 80 / 1.2	4 Rows	Thread M 14	2	1	**405.845.CC**
Cup Brush	**STA** crimped 0.35	DIA 65	Thread M 14	15	1	*421.167.CC*
Cup Brush	**ROH** crimped 0.30	DIA 65	Thread M 14	15	1	*421.367.CC*
Knot Cup Brush	**STH** straight 0.50	DIA 65	Thread M 14	12	1	*482.217.CC*
Knot Cup Brush	**STH** straight 0.50	DIA 90	Thread M 14	8	1	*485.237.CC*
Knot Conical Brush	**STH** straight 0.50	DIA 100	Thread M 14	5	1	*471.257.CC*
Knot Wheel Brush	**STH** straight 0.50	DIA 115	Bore 22.2	6	1	*472.211.CC*

Measurement in mm: Carton Size 1: 300 x 100 x 130 | Carton Size 2: 300 x 200 x 130

Sales Promotion Display

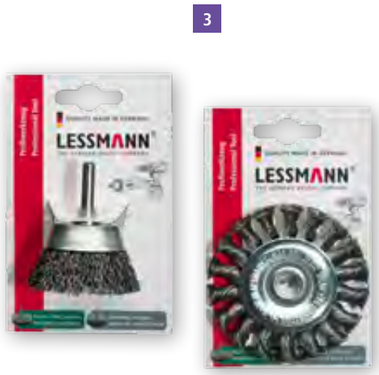

Low-cost product presentation – Brushes on card

EAN **1 Displaybox with Toolbrushes**

Pack	Catalogue Page	Filling	D mm | *inch*	d mm | *inch*	RPM max.	Pack.	Art.-No.
Knot Cup Brushes	55	**STH** 0.50 | *0.020"*	65 | *2 1/2*	M 14 x 2.0	12,500	20	**482.217.07**
Knot Wheel Brushes	17	**STH** 0.50 | *0.020"*	115 | *4 1/2*	22.2 | *7/8*	12,500	18	**472.211.07**
Knot Bevel Brushes	61	**STH** 0.50 | *0.020"*	100 | *4*	M 14 x 2.0	12,500	12	**471.257.07**
Crimped Cup Brushes	58	**STA** 0.30 | *0.012"*	60 | *2 3/8*	M 14 x 2.0	12,500	20	**421.167.07**

2 D.I.Y. Brush Assortments; Shank Brushes Description and technical data please see table above and on page 124, 125

Contents: 36 pieces assorted						Art.-No.
6 Wheel Brushes	410.132	6 Wheel Brushes	410.153	6 Cup Brushes	430.123	**499.907**
6 Cup Brushes	430.133	6 End Brushes	455.161	6 Cylinder Brushes	541.301	
9 Wheel Brushes	410.132	9 Cup Brushes	430.123			**499.921**
9 Wheel Brushes	410.153	9 Cup Brushes	430.133			

EAN **3 Brushes with Shank 6 mm Ø on Card** Description and technical data please see table above and on page 69, 124, 125

	D mm | *inch*	Pack.	**STA 0.30** | *0.012"* **0.35** | *0.014"*	**MES 0.25** | *0.010"* **0.30** | *0.012"*	**SIC 80** Art.-No.	**STH knotted 0.50** | *0.020"*
Wheel Brushes	50 | *2*	10	**410.123.07**			
	75 | *3*	10	**410.133.07**	**410.136.07**	*410.138.07*	**417.198.07**
	100 | *4*	10	**410.153.07**		**410.158.07**	
Cup Brushes	50 | *2*	10	**430.123.07**	**430.126.07**	**430.128.07**	
	75 | *3*	10	**430.133.07**		**430.138.07**	
End Brushes	25 | *1*	10	**455.161.07**			
Cylinder Brushes	28 | *1*	10	**541.301.07**			

The most demanded tool brushes are not only offered single or bulk packed. These fast sellers are presented even better in sale promoting display cartons. They can be put on tool shelves or on the counter.

The standard assortment contains:
- Knot cup brushes diameter 65
- Knot wheel brushes diameter 115
- Knot bevel brushes diameter 100
- Cup brushes with crimped wire diameter 60

A display carton with the best selling Do It Yourself Brushes, bulk packed, completes the offer.

Item Nos. in bold are available ex stock.
Consider our minimum order value for *italic printed* article numbers (see page 164).

STA = steel wire, crimped
STH = steel wire, high tensile, straight
MES = brass wire, crimped
SIC = silicon carbide bristles

Sales Promotion Tube Brushes

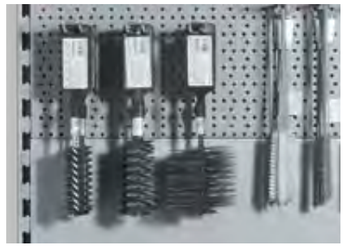

1 Hanger assembly for tube brushes, PP black, with euro hole

Interior Thread	Total length mm | *inch*	Width mm | *inch*	Height mm | *inch*	Pack.	Art.-No.
M 6	135 | *5*	42 | *1 5/8*	2 | *5/64*	10	**000.501**
M 10	135 | *5*	42 | *1 5/8*	2 | *5/64*	10	**000.503**
W 3/8"	135 | *5*	42 | *1 5/8*	2 | *5/64*	10	**000.506**
W 1/2"	135 | *5*	42 | *1 5/8*	2 | *5/64*	10	**000.507**

EAN **2 Brushes with thread, incl. hanger assembly**

	Diameter Brush mm | *inch*	Total length Brush mm | *inch*	Total length Brush mm | *inch*	Thread Brush	Pack.	**STA** Art.-No.
Tube Brushes	20 | *3/4*	150 | *6*	100 | *4*	W 1/2"	10	*502.120.03*
	30 | *1 1/4*	160 | *6 1/4*	100 | *4*	W 1/2"	10	**506.130.03**
	35 | *1 1/2*	160 | *6 1/4*	100 | *4*	W 1/2"	10	*506.135.03*
	40 | *1 3/8*	160 | *6 1/4*	100 | *4*	W 1/2"	10	**506.140.03**
	50 | *2*	160 | *6 1/4*	100 | *4*	W 1/2"	10	**506.150.03**
	63 | *2 1/2*	160 | *6 1/4*	100 | *4*	W 1/2"	10	*506.163.03*
	75 | *3*	160 | *6 1/4*	100 | *4*	W 1/2"	10	**506.175.03**
	101 | *4*	160 | *6 1/4*	100 | *4*	W 1/2"	10	**506.101.03**
Boiler Brushes	40 x 80 | *1 3/8 / 3*	160 | *6 1/4*	100 | *4*	W 1/2"	10	**532.202.03**
	50 x 100 | *2 / 4*	160 | *6 1/4*	100 | *4*	W 1/2"	10	**532.203.03**

Presentation for tube brushes
With this practical hanger assembly from now on also tube brushes with thread can be presented on self-service walls in the retail market.
The hangers are available in M 6, M 10, W 3/8" and W 1/2". All hangers are with a eurohole.
A label can be fixed at the front of the hanger.

Sales Promotion

Professionalism, service, quality...
The LESSMANN Display units will make a good impression on your customers. They are not only good for your image but will also have a positive effect on promoting and increasing your brush sales. The comprehensive and at the same time clear presentation makes the customers choice much easier.

Take advantage of our experience and use this possibility that will lead to successful increased sales. Beside your special demands the most important thing to know is the branch where your most important customers come from and what their demands are. We have tried and tested variations of assortments for different kind of constellation. Please do not hesitate to contact us and we will arrange your individual programme. Because the production of high quality brushes is as important as having success with our products!

1 | Self-service Wall 100 x 220 cm
The most effective sales promotion for your LESSMANN brush assortment. Available with LESSMANN logo or Brush-Know-how label.

2 | Individual mix for Success
Products that fit in with the wishes of your (most important) customers and their main demand, arranged together with you and your customers. Your assortment can mainly consist of technical brushes or hand brushes.

3 | Carton Packing
All brushes for angle grinders in sales promoting single packing – stable and safe.

4 | Hand Brushes with EAN Code
All standard hand brushes (article no. 10x.xxx) with EAN code. Without extra charges for you!

5 | Display boxes for Shank Brushes
Available as a standard for all shank wheel brushes, cup brushes and end brushes with shank.

6 | Brush-Know-how Flyer
The most important brush applications of our brush assortment in length DIN with technical information and hints!

7 | Hanger Assembly for tube brushes
With this hanger with euro hole, brushes with thread can be presented.

8 | Cut Cases
Cut Cases for an easy solution of presenting products in large quantities.

We will help you with the right choice of shelf
On request we can arrange the right shelf solution for presenting your brushes!

Small self-service wall
A suitable alternative solution: A practical self-service wall with the measurements 67 x 180 cm.

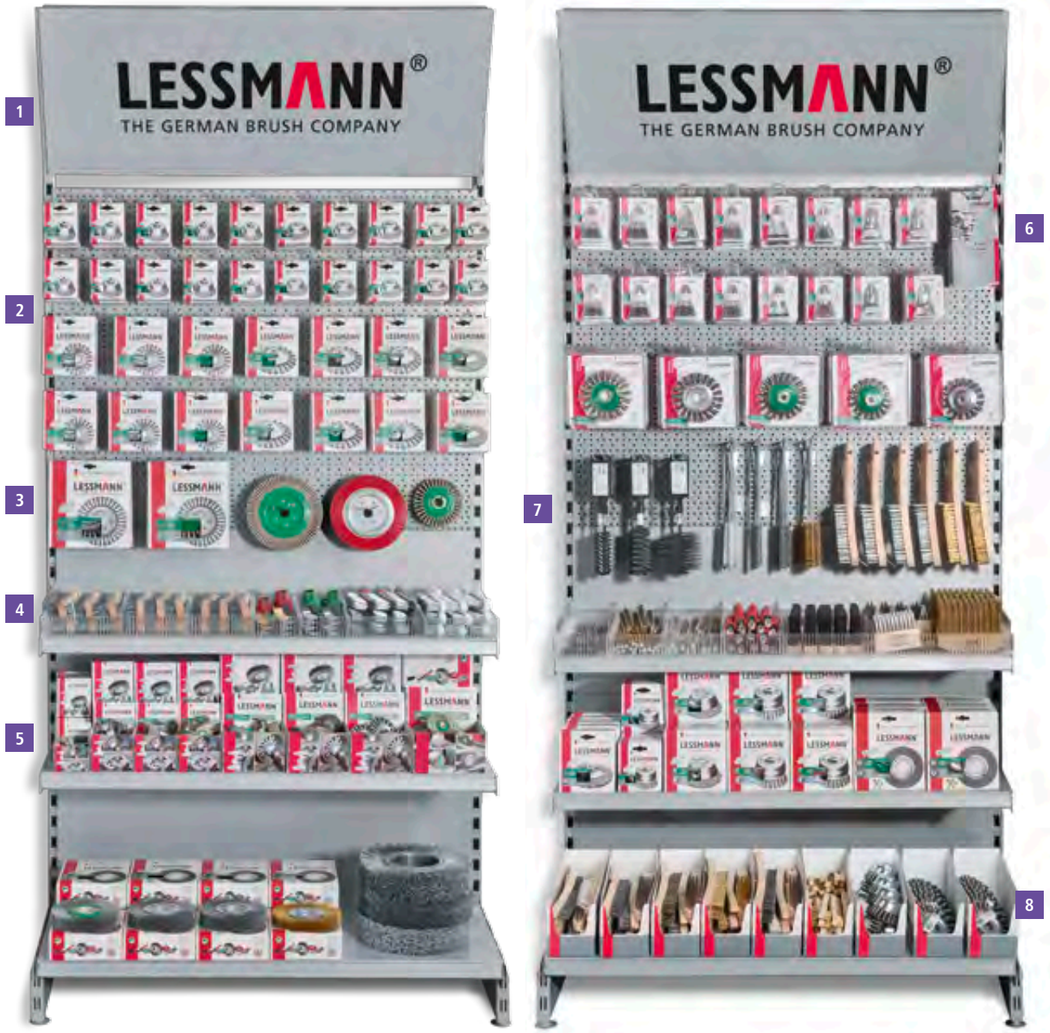

Private Label
A good idea with different solution possibilities. Ask for your own brand!

Sales promoting blister packing
For all drilling machines and angle grinders.

Take a look at quality
All technical data and safety information as well as observation windows for recognising the brushes (e.g. green marking for stainless steel brushes).

Stainless Steel Marking
LESSMANN brushes with stainless steel wire can easily be recognised by green cups or side plates.

Brush-Know-how flyer
The most important brush application of our brush assortment in length DIN with technical information and hints!

Order now:
German version: Art.-No. **99BKHDEU**
English version: Art.-No. **99BKHENG**

Cut Cases
Cut Cases for an easy solution of presenting products in large quantities.

LESSMANN

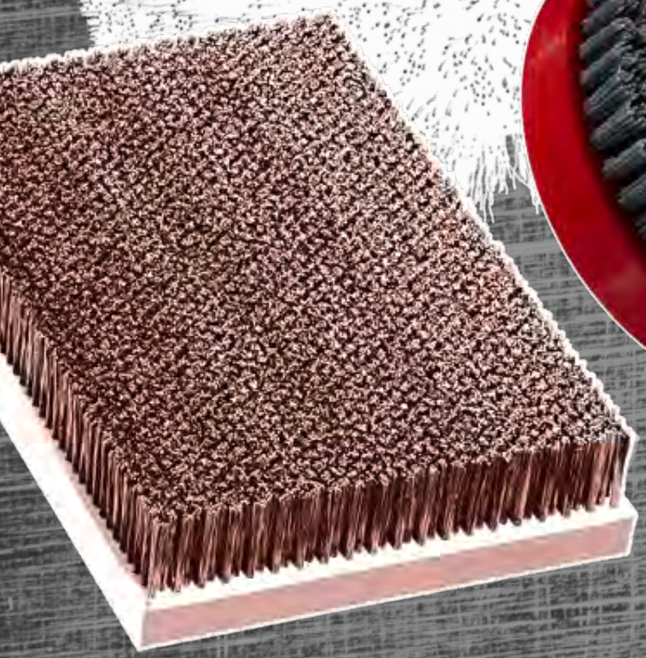

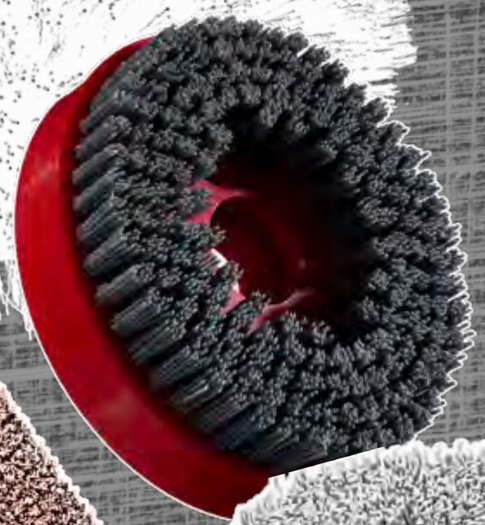

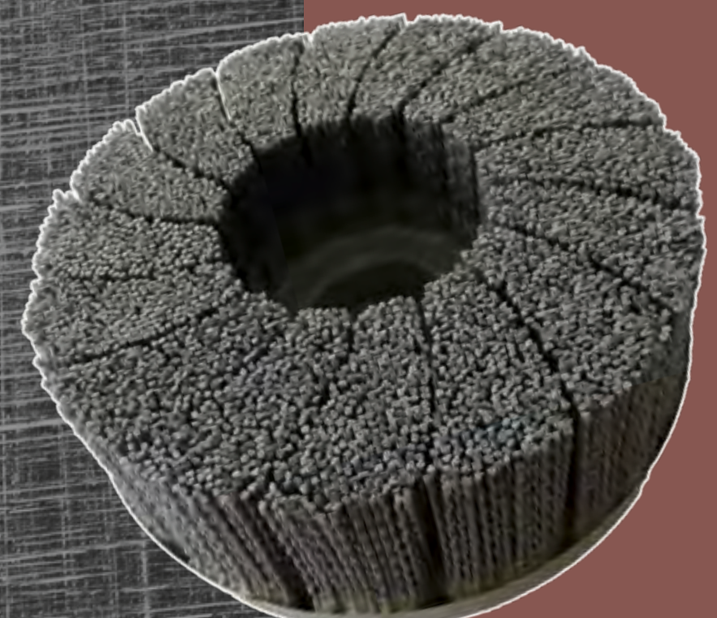

Brushes with carbon fibre

Brushes with carbon fibre for electrochemical cleaning

To use in machines for cleaning weld seams

Due to oxidation on stainless steel surfaces temper colour is a result from heating. Hence often a post-treatment of the surface is necessary to reestablish the original character.
End brushes with carbon fibres are used in special machines for cleaning weld seams. The typical electrochemical jobs are the following:

Cleaning
To remove tepering colour and scales on stainless steel surfaces, e.g. on weld seams.

Polishing
For polishing stainless steel surfaces. Residues can be removed with end brushes.

Marking
With special patterns surfaces can be marked permanently by the electrochemical process.

Electroplating / Surfacing
Due to the use of the end brushes, different coatings can be put on the surfaces or they can be refined.

Cleaning of areas which are hard to reach

Before the treatment | After the treatment
Cleaning of weld seams

End brushes for standard machines
For many customary available machines for weld seam treatment LESSMANN offers the suitable end brushes.
Depending on the customers' demands the end brushes are available with different adapters, e.g. interior / exterior threads.

Time-saving and effective
Unlike other processes, working with special machines for weld seam cleaning are environmentally friendly and by using it correctly no toxic vapours are generated.
Due to the high flexibility of the filament also areas which are hard to reach can be treated easily.
By using LESSMANN brushes within a short time a clean result is achieved. Weld seams are treated without any residues and surfaces are treated without being damaged.

Brushes with carbon fibre

	Sleeve	D mm | *inch*	GL mm | *inch*	BL mm | *inch*	Shape of thread	d	Presentation	Pack.	Art.-No.
1	Copper	10 | *25/64*	65 | *2 3/8*	30 | *1 3/16*	outside	M6		10	**047.700**
2	Copper	12 | *15/32*	90 | *3 1/2*	40 | *1 5/8*	inside	M10 x 0.75	Plastic coating	10	**047.705**
	Copper	12 | *15/32*	90 | *3 1/2*	40 | *1 5/8*	inside	M10 x 1.0	Plastic coating + side thread M4	10	**047.707**
	Copper	10 | *25/64*	80 | *3 1/4*	30 | *1 3/16*	inside	M8 x 1.0	Plastic coating	10	**047.708**
3	Stainless Steel	8 | *5/16*	50 | *2*	30 | *1 3/16*	outside	M6 x 1.0	Teflon sleeve (DRM 12 mm)	10	**047.750**
	Stainless Steel	8 | *5/16*	50 | *2*	30 | *1 3/16*	outside	M6 x 1.0		10	**047.755**
4	Stainless Steel	8 | *5/16*	72 | *2 53/64*	42 | *1 21/32*	outside	M6 x 0.75	Plastic coating	10	**047.754**
5	Stainless Steel	12 | *15/32*	75 | *3*	40 | *1 5/8*	inside	M10		10	**047.757**
6	Stainless Steel	10 | *25/64*	130 | *5 1/8*	60 | *2 3/8*	outside	M6 x 0.75	Plastic coating + external thread M12	10	*047.763**
	Stainless Steel	10.5 | *13/32*	130 | *5 1/8*	60 | *2 3/8*	outside	M6 x 0.75	Plastic coating + external thread M14	10	*047.764**
	Stainless Steel	12 | *15/32*	130 | *5 1/8*	60 | *2 3/8*	outside	M6 x 0.75	Plastic coating + external thread M16	10	*047.765**
7	Stainless Steel	12 | *15/32*	75 | *3*	40 | *1 5/8*	inside	M10		10	**047.801**

* Teflon protective sleeve on request

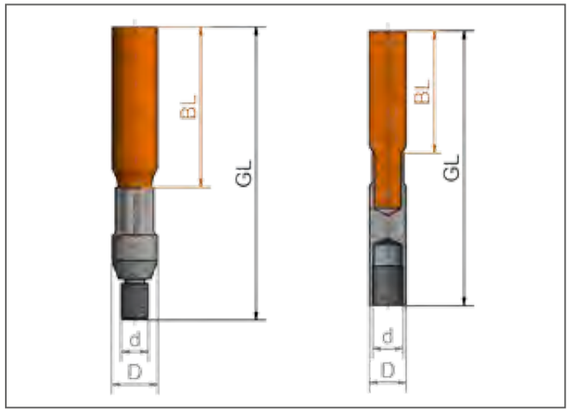

Item Nos. in bold are available ex stock.
Consider our minimum order value for *italic printed* article numbers (see page 164).

High Performance Filament Brushes

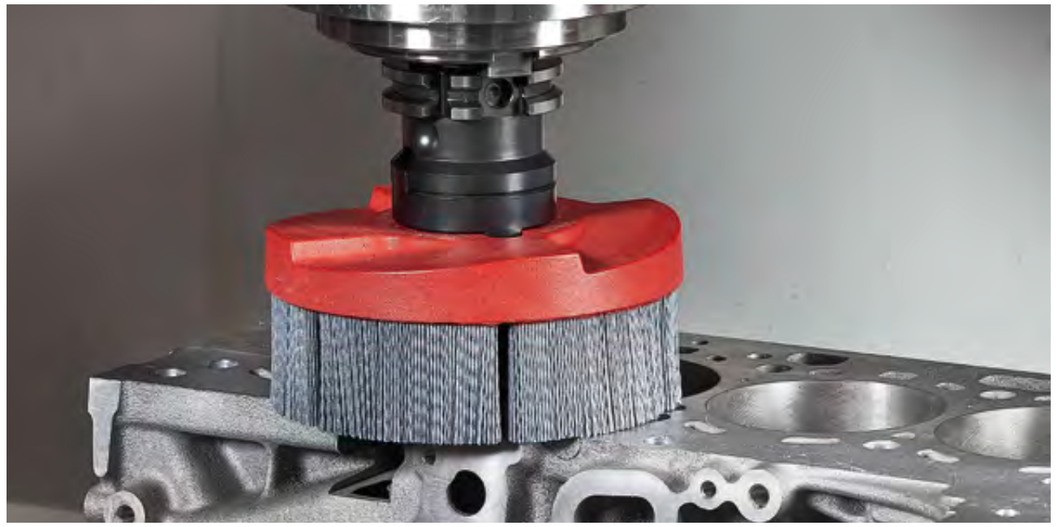

HFB Disc Brushes
LESSMANN high performance surface finishing tools achieve excellent deburrings and edge radiusing on exterior and interior areas of work pieces. Next to the applications in machining centers, especially in linear deburring and finishing lines with planetary brush systems HFB brushes obtain high efficiency.

They are used for e.g. for the deburring of
- blanked parts
- sintered parts
- hydraulic and pneumatic work pieces
- aluminium work pieces
- and many more

Also work pieces which are exposed to high pressures demand precise egde radiuses. LESSMANN HFB brushes are ideal tools which achieve these requirements outstandingly.

Typical work pieces which are treated with LESSMANN HFB brushes.

Filling material
In a special production process LESSMANN HFB brushes are manufactured with a very high filling density. Available are high abrasvie nylons with silicon carbide, ceramic or diamond grit. Standard in LESSMANN HFB Brushes high quality filling material is used (PA 6.12). It is very bending resistant and abrasion-resistant. Due to the application orientated selection of the filling materials an excellent deburring and constant edge radiusing in a short working time is achieved.

Depending on the HFB application the brushes can be used under dry condition or with addition of coolants.

Arrangement filling material
Depending on the requirements, the brushes can be manufactured with individual filling fields. For example, full filament is possible, but also the division of the abrasive bristles into defined fields or deviation of the bristles. Depending on the direction of rotation, more effective processing is possible, for example due to the optimum removal of cooling water.

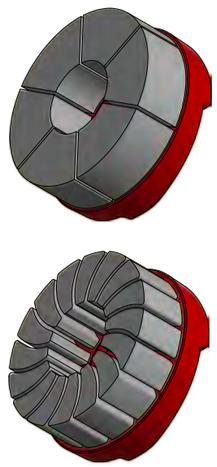

Examples arrangement filling material

Revised clamping system
LESSMANN manufactures brush types for all common brands of machines and drilling patterns according to customer specifications. Our basic versions, suitable for the common machines with cutter head holder (DIN 6357) or combi-milling arbor holder (DIN 6358), as well as special models are available short-term. LESSMANN HFB brushes are also suitable for accessories for working under wet conditions, e.g. clamping screws with coolant holes.

On request we can deliver the brushes with bore according to your special requirements.

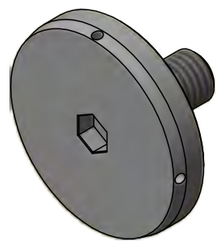

Clamping screw with coolant holes

Revised design
LESSMANN HFB brushes are constantly being further developed to meet the latest technical requirements. The latest adaptation is the revised design of the brush plate, which has been given a curved shape. Thus the brush can be used more flexible and the brush body is even more stable. The resulting dynamic rotation gives the brush optimum conditions for precise work. In addition, less chips and oil are trapped in the brush during machining, which leads to less abrasive wear.

User tips
- The optimum speed is usually clearly below the maximum speed. Please note the information on the brush body. See page 10 for details.
- The feed rate of the brush depends on the desired brush result and must be determined individually.
- When using the brush, make sure that all edges and surfaces to be machined are reached. In order to ensure uniform processing, it is important that the brush is not removed from the workpiece prematurely, especially during start-up and run-out.

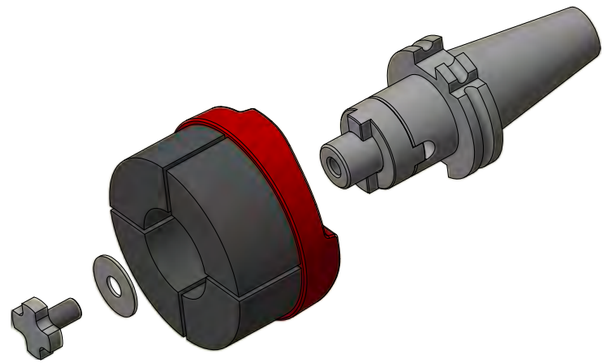

Common combi arbor holder for HFB brushes.

Contact us for further information and a nonbinding consultation!

High Performance Filament Brushes

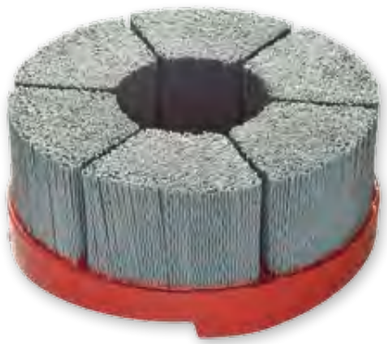

1

2

1 HFB Disc Brushes, full body, SIC

Body Ø DA mm | *inch*	Body Thikness KD mm | *inch*	Filling Length H mm | *inch*	Bore d	Open Space D2 mm | *inch*	Open Space D1 mm | *inch*	RPM max.	Pack.	SIC K 80 Art.-Nr.	SIC K 120 Art.-Nr.	SIC K 180 Art.-Nr.
50 | *2*	18 | *5/8*	35 | *1 3/8*	16 DKN	25 | *1*	45 | *2*	3,600	1	*601.204.20*	*601.304.20*	*601.404.20*
75 | *3*	20 | *3/4*	35 | *1 3/8*	22 DKN	34 | *1 1/4*	70 | *2 3/4*	3,600	1	**602.214.20**	**602.314.20**	**602.414.20**
100 | *4*	20 | *3/4*	35 | *1 3/8*	22 DKN	45 | *2*	95 | *3 1/2*	3,600	1	**603.214.20**	**603.314.20**	**603.414.20**
125 | *5*	22 | *7/8*	40 | *1 5/8*	27 DKN	55 | *2 31/4*	120 | *4 3/4*	3,000	1	**604.225.20**	**604.325.20**	**604.425.20**
150 | *6*	25 | *1*	40 | *1 5/8*	32 DKN	60 | *2 3/8*	145 | *5 71/100*	2,500	1	**605.265.20**	**605.365.20**	**605.465.20**

2 HFB Disc Brushes, full body, KK

Body Ø DA mm | *inch*	Body Thikness KD mm | *inch*	Filling Length H mm | *inch*	Bore d	Open Space D2 mm | *inch*	Open Space D1 mm | *inch*	RPM max.	Pack.	KK K 80 Art.-Nr.	KK K 120 Art.-Nr.
50 | *2*	18 | *5/8*	35 | *1 3/8*	16 DKN	25 | *1*	45 | *2*	3,600	1	*601.204.30*	*601.304.30*
75 | *3*	20 | *3/4*	35 | *1 3/8*	22 DKN	34 | *1 1/4*	70 | *2 3/4*	3,600	1	*602.214.30*	*602.314.30*
100 | *4*	20 | *3/4*	35 | *1 3/8*	22 DKN	45 | *2*	95 | *3 1/2*	3,600	1	*603.214.30*	*603.314.30*
125 | *5*	22 | *7/8*	40 | *1 5/8*	27 DKN	55 | *2 31/4*	120 | *4 3/4*	3,000	1	*604.225.30*	*604.325.30*
150 | *6*	25 | *1*	40 | *1 5/8*	32 DKN	60 | *2 3/8*	145 | *5 71/100*	2,500	1	*605.265.30*	*605.365.30*

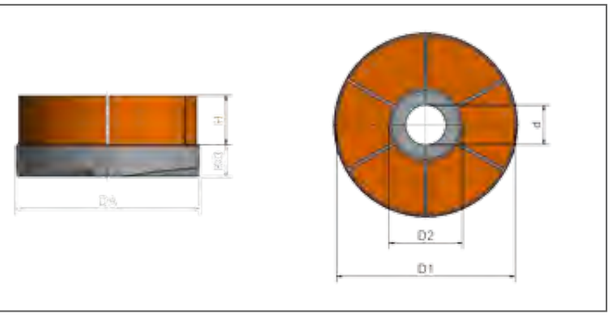

Item Nos. in bold are available ex stock.
Consider our minimum order value for *italic printed* article numbers (see page 164).

SIC = silicon carbide bristles
KK = abrasive nylon

Enquiry for High Performance Filament Brushes

Drawing / description of application

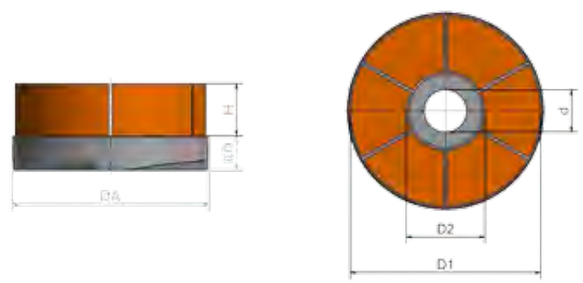

sender: company, contact person

Inquiries and Infos:
Phone: +49 9082 707-0 info@lessmann.com
Fax: +49 9082 707-76 www.lessmann.com

Piece number _____

Brush Application ☐ dry ☐ wet
☐ deburring
☐ others _____

Material to be treated ____°C Temperature
☐ steel
☐ aluminium
☐ stainless steel
☐ others _____

Filling material
☐ abrasive filament (SIC)
☐ abrasive filament (AO)
☐ abrasive nylon (KK)
☐ diamond grit (DIA)

Diameter of filling material _____

filling placement

☐ full-body

☐ turbo

turbo right / left (standard right) _____

Please indicate the dimensions according to the technical drawing (mm):

DA body diameter _____ mm
D1 Dia filament outside _____ mm
D2 Dia filament inside _____ mm
H Filling height _____ mm
Deviation of the bristles _____ °

☐ Standard bore
(adapted to body diameter, see page 142)
☐ Special bore _____

INDUSTRIAL BRUSHES

Staple Set Brushes

Staple Set Brushes
For applications with little mechanic load, brushes in a staple set edition are produced.
Typical applications for staple set Wheel Brushes and Wide Face Brushes, Disc Brushes or Lath Brushes are for example cleaning, deburring, surface finishing, structurizing, smoothing, transporting, sorting or moistening.
Depending on the requirements, the filling material can be fixed individually into the body. The distance of the bundles are variable and comply with the application.
As filling material next to different wires also fibres are available. Also mixed filament in various mixing proportions are possible.
Disc Brushes usually are delivered with thread or bore. Staple set wheel and roller brushes are produced with bore or arbour absorption, depending on the customers' specification.

Please inform yourself on the following pages and do not hesitate to contact us for personal advice!

Possible desities of brush filling material
for Wheel Brushes and Wide Face Brushes, Disc Brushes and Lath Brushes

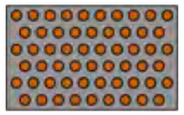
thin filling material

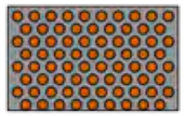
mean desity of filling material

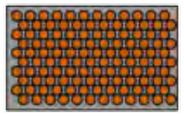
dense filling material

Possible placement of brush filling material
for Wheel Brushes and Wide Face Brushes, Disc Brushes and Lath Brushes

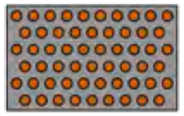
staggered filling material

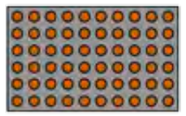
straight filling material

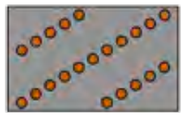
spiral filling material

Disc Brushes

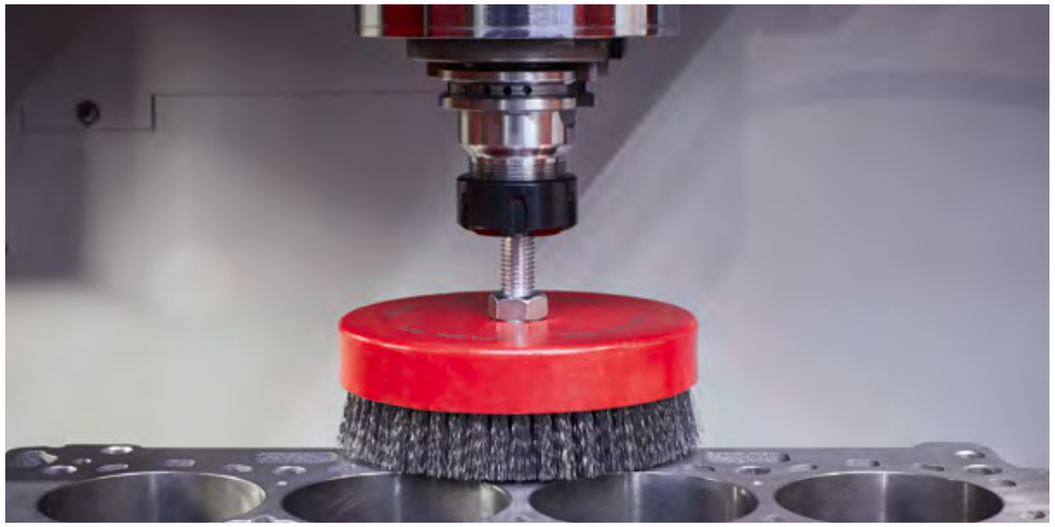

Disc Brushes – Measurements

DA	KD	H		d1/d2			
External diameter	Body height	Trim height	Deviation	Thread	Body	Trim	Trim
mm	mm	mm	of the Bristles		Material	Material	Density
10 - 800	10 - 100	8 - 95 steel 8 - 135 Plastic	max. 45°	freely selectable	PP, PE, PA, Wood, Plywood	STA, STM, MES, ROF, PP, PE, PA, FIB, ROS, SIC, AO	thin, mean, dense

Disc Brushes – for cleaning and deburring
Disc Brushes are used for the treatment of plane surfaces on almost every material. The numerous variations of body and trimming materials and adapter systems make them for all purposes applicable.
For deburring working pieces, disc brushes can be inserted in individual equipments as well as in machining centres for removing secondary burrs.

Disc Brushes for the wood machining industry
Disc brushes used for the wood machining industry have a very long filling material (SIC). Used on angle grinders, the disc brushes are ideal for maintaining, cleaning, structuring or polishing wood.
The brushes are very effective when working on large surfaces.

Circular Discs – Standard Body
If your application allows the mentioned sizes, we recommend our standard bodies.

The inquiry form for disc brushes you find on page 141 or at www.lessmann.com

Item Nos. in bold are available ex stock.
Consider our minimum order value for *italic printed* article numbers (see page 164).

STA = steel wire
STM = brass coated steel
ROF = stainless steel wire
MES = brass wire
PP = polypropylene
PA = polyamide
PE = polyethylene
FIB = fibre
ROS = horse hair
SIC = silicon carbide bristles
AO = aluminium oxide bristles

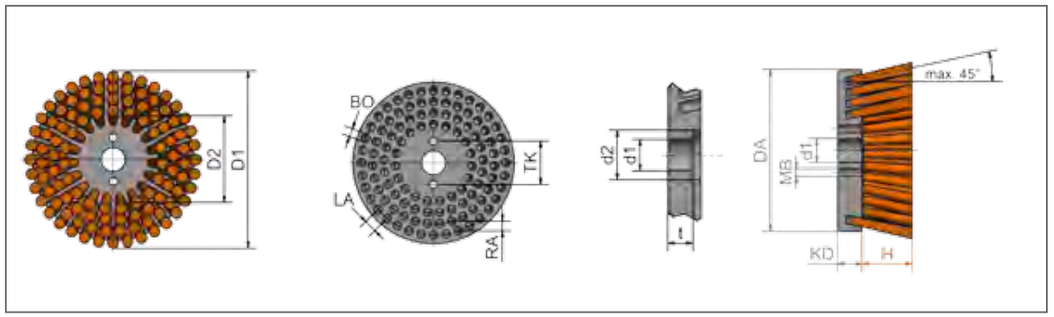

Disc Brushes

Disc Brushes

	Filling	DA mm | *inch*	KD mm | *inch*	H mm | *inch*	d1 mm | *inch*	RPM max.	Art.-No.
	STA 0.20 | *0.008"*	150 | *6*	25 | *1*	25 | *1*	M 14	2,000	**405.006**
	SIC 180/1.0	125 | *5*	25 | *1*	25 | *1*	22.2 | *7/8*	3,000	*405.854*
	SIC 180/1.0	150 | *6*	25 | *1*	20 | *3/4*	25 | *1*	2,000	*405.835*
	SIC 120/1.1	150 | *6*	25 | *1*	25 | *1*	25 | *1*	2,000	*405.864*
1	**Mixed filament STA** 0.30 / **PA** 0.35	130 | *5 1/8*	25 | *1*	40 | *1 3/8*	M 14	2,500	*405.908*
1	**Mixed filament STA** 0.30 / **PA** 0.35	200 | *8*	25 | *1*	40 | *1 3/8*	M 14	1,500	*405.905*

2 Disc Brushes for the wood machining

Filling	DA mm | *inch*	KD mm | *inch*	H mm | *inch*	d1	RPM max.	Pack.	Art.-No.
SIC 46/1.6	130 | *5 1/8*	20 | *3/4*	50 | *2*	M 14	2,500	1	*405.843*
SIC 60/1.5	130 | *5 1/8*	20 | *3/4*	50 | *2*	M 14	2,500	1	*405.844*
SIC 80/1.2	130 | *5 1/8*	20 | *3/4*	50 | *2*	M 14	2,500	1	**405.845**

Circular Discs – Standard Body – Measurements (in Stock) Body Material PP (red)

DA mm | *inch*	KD mm | *inch*	d1
130 | *5 1/8*	20 | *3/4*	Bore 22.5 / 19
150 | *6*	25 | *1*	Bore 12
150 | *6*	25 | *1*	Bore 35 / 25, mounting hole 2 x ø11, TK 56
180 | *7*	18 | *5/8*	Thread M12
180 | *7*	18 | *5/8*	Thread M12 left
200 | *8*	25 | *1*	Bore 12
200 | *8*	25 | *1*	Bore 35 / 25, mounting hole 2 x ø11, TK 56
220 | *8 5/8*	20 | *3/4*	Bore 40

Brush intake with shank

D mm | *inch*	KL mm | *inch*	mm | *inch*	Art.-No.
16 | *5/8*	81 | *3 3/16*	Bore 35/25 | *1 3/8/1*	*000.051*

The standard bodies can be adapted on demand (dress to size, drill) for receiving other measurements.

Enquiry for Disc Brushes

Drawing / description of application

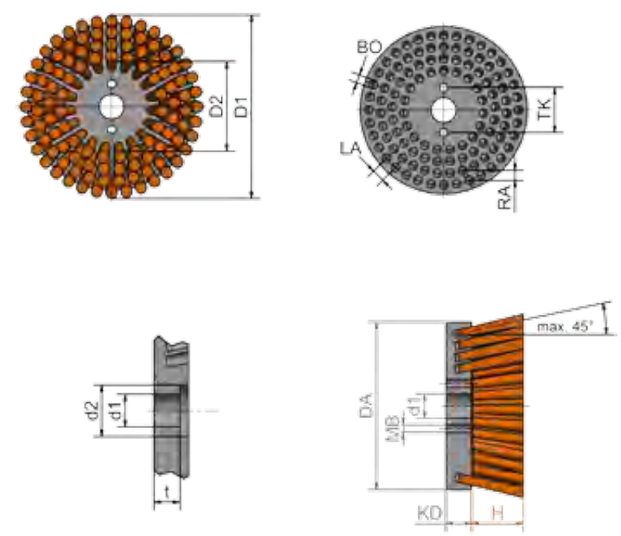

sender: company, contact person

Inquiries and Infos:
Phone: +49 9082 707-0 info@lessmann.com
Fax: +49 9082 707-76 www.lessmann.com

Piece number: _____

Brush Application ☐ dry ☐ wet
- ☐ deburring
- ☐ cleaning
- ☐ surface treatment
- ☐ others _____

Material to be treated _____°C Temperature
- ☐ steel
- ☐ aluminium
- ☐ wood
- ☐ stainless steel
- ☐ plastic
- ☐ others _____

Filling material
- ☐ steel
- ☐ brass coated steel
- ☐ brass
- ☐ stainless steel
- ☐ polypropylene
- ☐ polyethylene
- ☐ polyamide
- ☐ abrasive filament (SIC)
- ☐ abrasive filament (AO)
- ☐ fibre
- ☐ horse hair

Diameter of filling material _____

Filling density

☐ light ☐ medium ☐ close

Filling placement

☐ **full seat** ☐ **block fill** ☐ **dynamic fill**

Please mention measurements according to drawing (mm)

DA	body diameter	_____	mm
D1	outer diameter	_____	mm
D2	inner diameter	_____	mm
KD	body thickness	_____	mm
d1	bore	_____	mm
d2	diameter counterbore	_____	mm
TK	pitch circle drive bore	_____	mm
MB	diameter drive bore	_____	mm
H	trim height	_____	mm
Stocking skew		_____	°

Body material
- ☐ polypropylene (standard)
- ☐ other _____

INDUSTRIAL BRUSHES

Lath Brushes

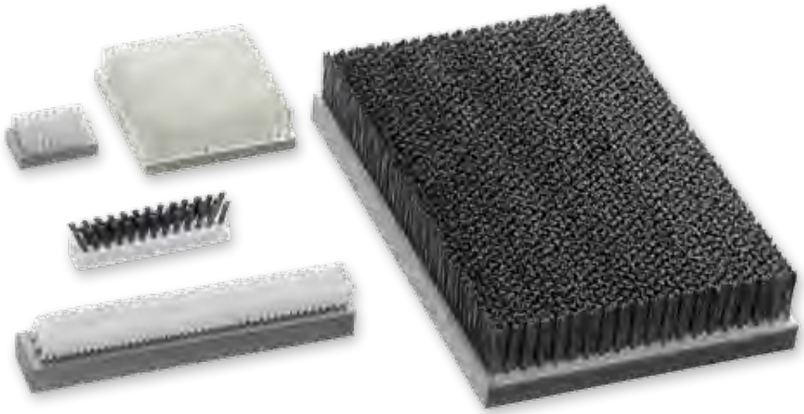

Lath Brushes – Measurements

KB mm	KL mm	KD mm	H mm	Deviation of the Bristles	Body Material	Filling Material	Filling Density
8 - 750	8 - 2400	10 - 100	8 - 95 Steel 8 - 135 Plastic	max. 35°	PP, PE, PA, Wood, Stack wood	STA, STM, MES, ROF, PP, PE, PA, FIB, ROS, SIC, AO	thin, mean, dense

Lath Brushes
Lath Brushes work in machines and are used for clearing, cleaning, insulating and discharging electric charges etc. Various body materials are possible: including wood and plastic.
The filling material can be manifold and goes from fine horsehair to firm steel wire. Through the deviation of the bristles until 35° the lath bushes are very flexible in their applications.

As required the stocked standard bodies could be reworked (turned, drilled out) to get further dimensions

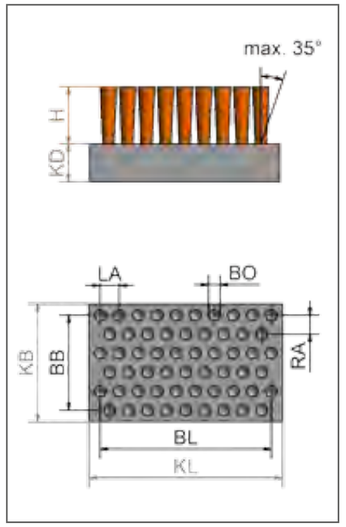

Item Nos. in bold are available ex stock.
Consider our minimum order value for *italic printed* article numbers (see page 164).

STA	= steel wire
STM	= brass coated steel
ROF	= stainless steel wire
MES	= brass wire
PP	= polypropylene
PA	= polyamide
PE	= polyethylene
FIB	= fibre
ROS	= horse hair
SIC	= silicon carbide bristles
AO	= aluminium oxide bristles

Enquiry for Lath Brushes

Drawing / description of application

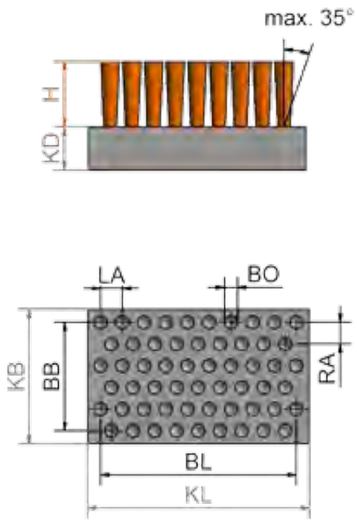

sender: company, contact person

Inquiries and Infos:
Phone: +49 9082 707-0 info@lessmann.com
Fax: +49 9082 707-76 www.lessmann.com

Piece number _____

Brush Application ☐ dry ☐ wet
- ☐ caulk
- ☐ cleaning
- ☐ fix
- ☐ transporting
- ☐ others _____

Material to be treated_____°C Temperature
- ☐ steel
- ☐ aluminium
- ☐ wood
- ☐ stainless steel
- ☐ plastic
- ☐ others _____

Filling material
- ☐ steel
- ☐ brass coated steel
- ☐ brass
- ☐ stainless steel
- ☐ polypropylene
- ☐ polyethylene
- ☐ polyamide
- ☐ abrasive filament (SIC)
- ☐ abrasive filament (AO)
- ☐ fibre
- ☐ horse hair
- ☐ others _____

Diameter of filling material _____

Filling density

☐ light ☐ medium ☐ close

Filling placement

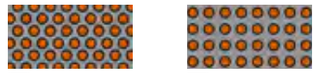

☐ **added** ☐ **straight**

Please mention measurements according to drawing (mm)

KL	total length	_____	mm
KB	total width	_____	mm
KD	body thickness	_____	mm
BL	occupied length	_____	mm
BB	occupied width	_____	mm
H	trim height	_____	mm
Deviation of the Bristles		_____	°

Body material
- ☐ polypropylene (standard)
- ☐ other _____

INDUSTRIAL BRUSHES

Wheel Brushes and Wide Face Brushes

Staple Set Wheel and Roller Brushes – Measurements							
D	**KD**	**KL**	**A**	**d**	Body	Filling	Filling
mm	mm	mm	mm	mm	Material	Material	Density
45 - 440 steel 45 - 500 plastic	25 - 250	5 - 800	3 - 780	freely selectable	PP, PE, PA, Wood	STA, STM, MES, ROF, PP, PE, PA, FIB, ROS, SIC, AO	thin, mean, dense
Standard body diameter (on stock) in body material PP							
50, 80, 100, 140							

Staple Set Wheel and Roller Brushes
These brushes are used for cleaning, deburring, surface finishing, structurizing, smoothing and transporting.
The brush body is of wood or plastic. The filling material is determined by the brushes purpose. Please also consider temperature, chemical and mechanical characteristics during use. Filling lenght, filling material, filling diameter and filling density are significant for the mode of action of the brush.
The density of the filling material can be varied by the diameter and the distance of and from the hole.
The staple set wheel and roller brushes are available with bore or arbor absorption, depending on the customers' specification.
The mentioned data in the chart should support you defining the right brush for your application.
For further information or support do not hesitate to contact us by e-mail, phone or fax. We will be very pleased to support you.

Note:
For applications which have a high mechanical load on the brushes we advise our wheel and roller brushes with crimped or knotted wire (page 49).

As required the stocked standard bodies could be reworked (turned, drilled out) to et further dimensions

Item Nos. in bold are available ex stock.
Consider our minimum order value for *italic printed* article numbers (see page 164).

STA	= steel wire
STM	= brass coated steel
ROF	= stainless steel wire
MES	= brass wire
PP	= polypropylene
PA	= polyamide
PE	= polyethylene
FIB	= fibre
ROS	= horse hair
SIC	= silicon carbide bristles
AO	= aluminium oxide bristles

Enquiry for punched Wheel and Wide Face Brushes

INDUSTRIAL BRUSHES

Drawing / description of application

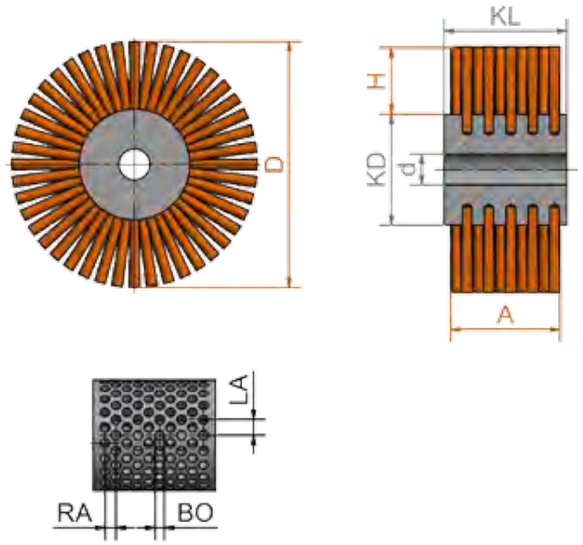

sender: company, contact person

Inquiries and Infos:
Phone: +49 9082 707-0 info@lessmann.com
Fax: +49 9082 707-76 www.lessmann.com

Piece number_____

Brush Application ☐ dry ☐ wet
- ☐ deburring
- ☐ cleaning
- ☐ roughening / structuring
- ☐ transporting
- ☐ others _____

Material to be treated_____°C Temperature
- ☐ steel
- ☐ aluminium
- ☐ wood
- ☐ stainless steel
- ☐ plastic
- ☐ others _____

Filling material
- ☐ steel
- ☐ brass coated steel
- ☐ brass
- ☐ stainless steel
- ☐ polypropylene
- ☐ polyethylene
- ☐ plyamide
- ☐ abrasive filament (SIC)
- ☐ abrasive filament (AO)
- ☐ fibre
- ☐ horse hair
- ☐ others _____

Diameter of filling material _____

Filling density

☐ light ☐ medium ☐ close

Filling design

☐ **added** ☐ **straight** ☐ **spirally**

Please mention measurements according to drawing (mm)

D	outer diameter	_____	mm
KD	body diameter	_____	mm
KL	body lenght	_____	mm
A	occupied width	_____	mm
d	bore	_____	mm

Body material
- ☐ polypropylene (standard)
- ☐ other _____

Strip Brushes

Everything from one source
In April of the year 2019, Lessmann took over the company Robert Thaler in Solingen, whereby the the range of strip brushes could be greatly expanded.
By taking over all the employees and their long-standing know-how as well as the plants and machinery of Robert Thaler, Lessmann now offers an extended product range of high-quality strip brushes „Made in Germany".

Highest and constant product quality as well as a wide variety of in-house products and delivery times tailored to the customer are now also guaranteed in this product category.

You will find an overview of the articles as well as an inquiry form for the strip brushes on the following pages. Further information can be found in our separate brochure or at: **www.lessmann.com**

Strip brushes
Strip brushes can be used in many ways. Strip brushes have very dense and close filling and thus they can help to save energy with long lifetime.
They seal gates and doors and prevent of infiltration, cold, humidity, leaves and dirt. They also protect moving parts (installation in machines and systems) from dust and other undesirable particles. Strip brushes also can be used for transport, guiding and securing of sensitive objects. Strip brushes from Lessmann are available in different shapes and with different adapters and filling materials.

Structure of a strip brush

Filling materials
All LESSMANN strip brushes are available with the following filling materials:
- **Natural hair:**
  horse hair (grey) mixed and black
- **Synthetic Filaments:**
  Polypropylene PP, white and black
  Polyamide PA white and black
- **Wires**:
  Steel wire, stainless steel wire, brass wire
- and other natural hair and bristles, fibre, plant bristles, synthetic filaments and wires in different variants

Standard Backing
The filling materials of strip brushes will be bound in a U-shaped metal strip.

We offer following backings:
- zinc-plated steel plate
- stainless steel plate
- brass strip (only for some brush types)
- Other backing materials on request.

You will find our **enquiry forms** in the respective category:
www.lessmann.com/index.php/en/Products or in the catalogue on page 157

Strip brushes for slots / profiles

Strip brushes for slots - dimensions

RB	SH	BH	GH
mm | *inch*	mm | *inch*	mm | *inch*	mm | *inch*
2,8 - 13,5 | *7/64 - 17/32*	max. 15 | *19/32*	5 - 500 | *13/64 - 20*	max. 515 | *20 9/32*

Strip brushes for slots
We offer strip brushes that are to be fitted in machined slots in different sizes and backing width and height. Depending on the individual application we offer different filling materials.

Profiles
We supply h- and F- Profile made of aluminium for strip brushes. On request we can produce the profiles with
perforation or/ and notches at the profile legs as well as cut them on requested measurement.

Standard lengths of the profiles:
1000, 1100, 1200, 1300, 2000, 2500, 3000 mm.

Anodized Profiles on request:
Silver, dark bronze, black as well as powder coated profiles in different colours.

Please note our standard dimensions (see separate strip brush catalogue).

Max. possible length of the brush and the profile 5000 mm (for longer brushes no delivery method possible).

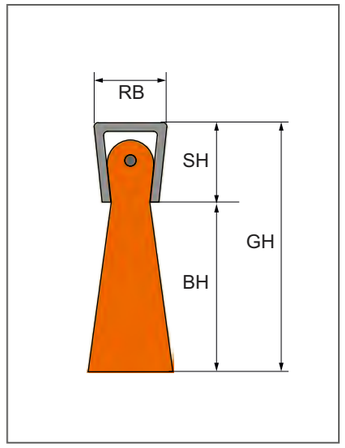

Profiles

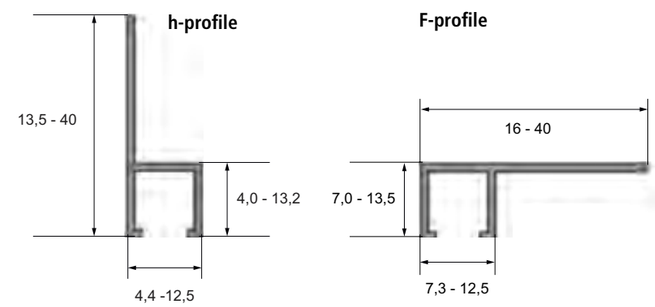

Item Nos. in bold are available ex stock.
Consider our minimum order value for *italic printed* article numbers (see page 164).

STA	= steel wire
ROF	= stainless steel wire
PA	= polyamide
ROS	= horse hair

Strip brushes for slots / profiles

Strip Brushes with H profile, aluminium

Profile	GH	FH	H	FB	RB	Total length	PA 0.30 | *0.012"*	STA	ROF	Horsehair
	mm | *inch*	mm | *inch*	mm | *inch*	mm | *inch*	mm | *inch*	mm | *inch*	Art.-No.	Art.-No.	Art.-No.	Art.-No.
H-Profile	50 | *2*	25 | *1*	25 | *1*	8 | *5/16*	5 | *13/64*	1,000 | *40*	**052.881**	**051.360**	**051.558**	*051.021*
H-Profile	90 | *3 1/2*	40 | *1 3/8*	50 | *2*	12 | *15/32*	8 | *5/16*	1,000 | *40*	**052.891**	**051.348**	**051.547**	available on demand
H-Profile	65 | *2 1/2*	40 | *1 3/8*	25 | *1*	12 | *15/32*	8 | *5/16*	1,000 | *40*		*051.324*		

Strip Brushes for deburring machines

Mounting	GH	H	RB	Total length	PA 0.35 | *0.014"*
	mm | *inch*	mm | *inch*	mm | *inch*	mm | *inch*	Art.-No.
Steel plate zinc coated	40 | *1 3/8*	35 | *1 1/2*	8 | *5/16*	500 | *20*	*052.860*
Steel plate zinc coated	40 | *1 3/8*	35 | *1 1/2*	8 | *5/16*	600 | *23 5/8*	*052.868*

Brushes for deburring machines
Special Strip Brushes as component part of deburring machines. The brushes give the workpieces to be machined a straight run during machining.

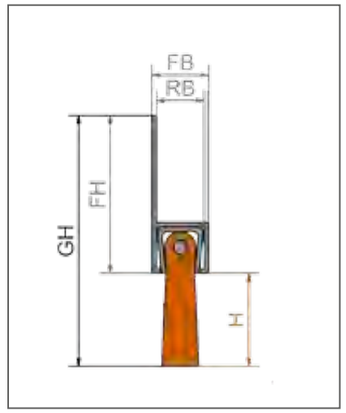

Item Nos. in bold are available ex stock.
Consider our minimum order value for *italic printed* article numbers (see page 164).

STA = steel wire
ROF = stainless steel wire
PA = polyamide
ROS = horse hair

Sealing Brushes with top and lower mounting plate

1 Sealing Brushes with top mounting plate

RB	SH	FH	BH	GH
mm | *inch*	mm | *inch*	mm | *inch*	mm | *inch*	mm | *inch*
6 - 9 | *15/64 - 3/8*	7 - 10 | *9/32 - 25/64*	17 - 50 | *43/64 - 2*	5 - 500 | *13/64 - 20*	max. 550 | *21 21/32*

2 Sealing Brushes with lower mounting plate

RB	SH	SL	BH	GH
mm | *inch*	mm | *inch*	mm | *inch*	mm | *inch*	mm | *inch*
6 - 9 | *15/64 - 3/8*	7 - 10 | *9/32 - 25/64*	14 - 47 | *9/16 - 1 27/32*	8 - 500 | *5/16 - 20*	max. 510 | *20 5/64*

Sealing Brushes with top and lower mounting plate
We offer sealing brushes for screwing on in different sizes as well as different backing width and length of the legs.
The sealing brushes can be mounted directly. Depending on the brush application we offer different filling materials.
On request we can produce the profiles with perforation or/ and notches at the profile legs.

Please refer to our separate catalogue „Strip Brushes" for details on our standard dimensions and filling materials. Other dimensions available on request.

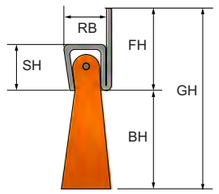

1 Sealing Brushes with top mounting plate

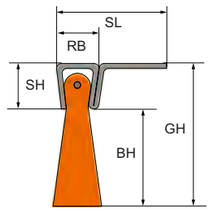

2 Sealing Brushes with lower mounting plate

Item Nos. in bold are available ex stock.
Consider our minimum order value for *italic printed* article numbers (see page 164).

STA = steel wire
ROF = stainless steel wire
PA = polyamide
ROS = horse hair

Special shaped strip brushes

Strip brushes

	RB	SH	Ø innen	Ø außen
Ring shaped strip brushes, filling face out	mm | *inch*	mm | *inch*	mm | *inch*	mm | *inch*
	2.4 - 8.3 | *3/32 - 21/64*	2.7 - 9.5 | *7/64 - 3/8*	6 - 320 | *15/64 - 12 19/32*	16 - 550 | *5/8 - 21 21/32*
Ring shaped strip brushes, filling face				
	2.4 - 8.3 | *3/32 - 21/64*	2.7 - 9.5 | *7/64 - 3/8*	0 - 200 | *0 - 8*	20 - 500 | *51/64 - 20*
Cup shaped strip brushes				
	2.4 - 8.3 | *3/32 - 21/64*	2.7 - 9.5 | *7/64 - 3/8*	0 - 200 | *0 - 8*	20 - 500 | *51/64 - 20*

* Please specify: Outer or inner diameter

Special shaped strip brushes
Special shaped strip brushes complement our assortment of classic strip brushes.

Spiral or ring shaped brushes are available with outward or inward facing filament. Brushes with **filling facing outward** can be used for cleaning, polishing, for applying liquids, for gentle transport and for deburring.

Strip brushes with **filling facing inwards** can be used for sealing, cleaning and carrying cylindrical parts in mechanical engineering, tool manufacturing and vehicle construction.

Cup shaped strip brushes can be used for sealing rotating tools or nozzles, for cleaning, for applying liquids and polishing surfaces.

Please refer to our separate catalogue „Strip Brushes" for details on our standard dimensions and filling materials. Other dimensions available on request.

We offer strip brushes in different sizes and backing width and height. Depending on the individual application we offer different filling materials.

Item Nos. in bold are available ex stock.
Consider our minimum order value for *italic printed* article numbers (see page 164).

STA = steel wire
ROF = stainless steel wire
PA = polyamide
ROS = horse hair

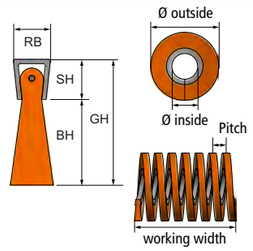

Ring shaped strip brushes, filling face outside

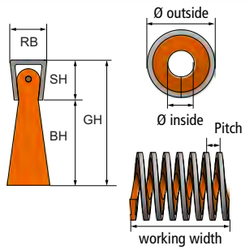

Ring shaped strip brushes, filling face inside

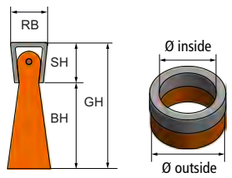

Cup shaped strip brushes

Enquiry for Strip Brushes

Drawing / description of application

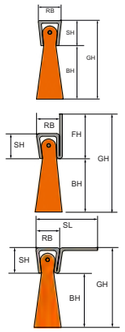

☐ Strip brushes for slots
Profile (material ALU) ☐ h ☐ F

☐ Strip brushes for mounting at the top

☐ Strip brushes for mounting at the bottom

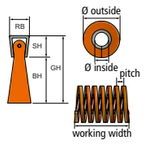

☐ Ring shaped strip brushes, filling material face outside

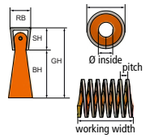

☐ Ring shaped strip brushes, filling material face inside

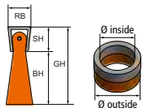

☐ Strip brushes, cup shaped

Sender: Company, contact person

Piece number: _____

Brush application ☐ **dry** ☐ **wet**

- ☐ sealing
- ☐ sloughing
- ☐ deburring
- ☐ cleaning
- ☐ roughening
- ☐ transporting
- ☐ other _____

Material to be treated ____°C Temperature

- ☐ steel
- ☐ aluminium
- ☐ wood
- ☐ stainless steel
- ☐ plastic
- ☐ other _____

Filling material

- ☐ steel
- ☐ rass coated steel
- ☐ brass
- ☐ stainless steel
- ☐ polypropylene
- ☐ polyethylene
- ☐ polyamide
- ☐ abrasive filament (SIC)
- ☐ abrasive filament (AO)
- ☐ fibre
- ☐ horse hair

Diameter for filling material: _____

Please indicate the dimensions according to the technical drawing (mm)

RB Backing width _____ mm
BH Filling height _____ mm
FH Backing height _____ mm
SH Socket height _____ mm
GH Total height _____ mm
SL Socket length _____ mm
Inner diameter (shaped brushes) _____ mm
Outer diameter (shaped brushes) _____ mm
Working width (shaped brushes) _____ mm
Number of windings (spiral brushes) _____ pcs.
Pitch (if required) _____ mm

Enquiry for Wheel and Deburring Brushes

Drawing / description of application

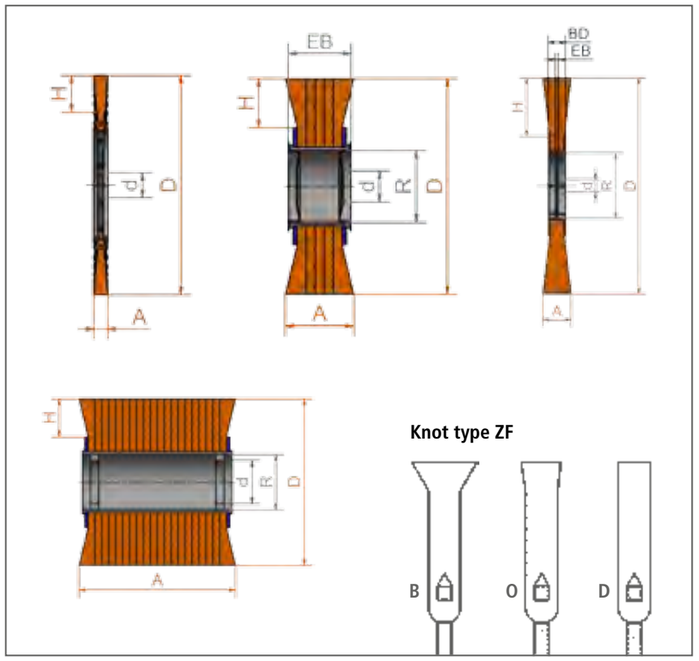

Sender: Company, contact person

Piece number _____

Brush Application ☐ dry ☐ wet

- ☐ derusting
- ☐ removing paint
- ☐ deburring
- ☐ cleaning
- ☐ roughening / structuring
- ☐ weld dressing
- ☐ others _____

Material to be treated _____°C Temperature

- ☐ steel
- ☐ aluminium
- ☐ wood
- ☐ stainless steel
- ☐ plastic
- ☐ others _____

Filling material

- ☐ crimped ☐ knotted
- ☐ steel
- ☐ brass coated steel
- ☐ brass
- ☐ stainless steel
- ☐ polyamide
- ☐ abrasive filament (SIC)
- ☐ abrasive filament (AO)

Diameter for filling material _____

Please indicate the dimensions according to the technical drawing (mm):

D Diameter _____ mm
d bore/thread _____ mm
H trim height _____ mm
A working width _____ mm
R tube _____ mm
EB clamping width _____ mm

Knot type if necessary (more aggressive execution)

- ☐ B Rose Bud
- ☐ O open Knot (wire ends are cut)
- ☐ D Fully knotted (wire ends are cut completely)

Used machine

- ☐ Hand-operated machine (e.g. angle grinders) _____
- ☐ stationary machine (z.B. CNC) _____
- ☐ others _____

Machine data

max. speed _____

Inquiries and Infos:
Phone: +49 9082 707-0 info@lessmann.com
Fax: +49 9082 707-76 www.lessmann.com

Enquiry for Cutback Brushes

Drawing / description of application

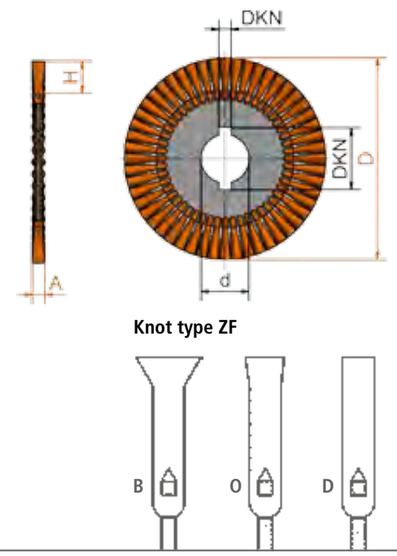

Sender: Company, contact person

Piece number _____

Brush Application ☐ dry ☐ wet

- ☐ removal of pipe coatings
- ☐ others _____

Material to be treated ____°C Temperature

- ☐ steel
- ☐ stainless steel
- ☐ others _____

Filling material

- ☐ steel
- ☐ brass coated steel
- ☐ stainless steel

Besatzstärke: _____

Please indicate the dimensions according to the technical drawing (mm):

D Diameter _____ mm
d bore _____ mm
DKN double keyway _____ mm
H trim height _____ mm
A working width _____ mm
Z number of knots _____ pcs.
EB clamping width _____ mm

Knot type

- ☐ B Rose Bud
- ☐ O Open Knot (wire ends are cut)
- ☐ D Fully knotted (wire ends are cut completely)

Verwendete Maschine

- ☐ stationary machine, Type _____
- ☐ others _____

Machine data

max. speed _____

Inquiries and Infos:
Phone: +49 9082 707-0 info@lessmann.com
Fax: +49 9082 707-76 www.lessmann.com

Enquiry for Cup and Bevel Brushes

Drawing / description of application

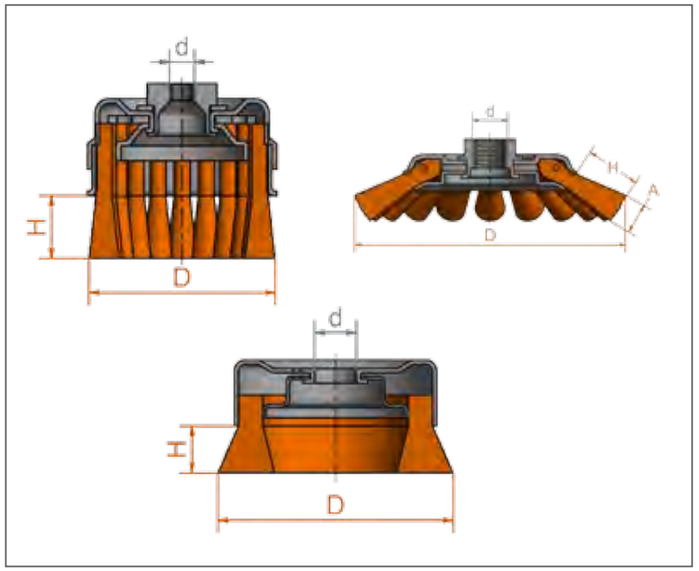

Sender: Company, contact person

Piece number _____

Brush Application ☐ dry ☐ wet

- ☐ derusting
- ☐ removing paint
- ☐ deburring
- ☐ cleaning
- ☐ weld dressing
- ☐ others _____

Material to be treated ____°C Temperature

- ☐ steel
- ☐ aluminium
- ☐ stainless steel
- ☐ others _____

Filling material

- ☐ crimped ☐ knotted
- ☐ steel
- ☐ brass coated steel
- ☐ brass
- ☐ stainless steel
- ☐ abrasive filament (SIC)

Diameter for filling material _____

Please indicate the dimensions according to the technical drawing (mm):

D	Diameter	_____	mm
d	bore/thread	_____	mm
H	trim height	_____	mm
A	working width	_____	mm
H1	Height of support cuff	_____	mm

Used machine

- ☐ hand-operated machine (e.g. angle grinders)_____
- ☐ stationary machine (z.B. CNC)_____
- ☐ others _____

Machine data

max. speed _____

max. brush height _____ mm

Inquiries and Infos:
Phone: +49 9082 707-0 info@lessmann.com
Fax: +49 9082 707-76 www.lessmann.com

Enquiry for Brushes with Shank

Drawing / description of application

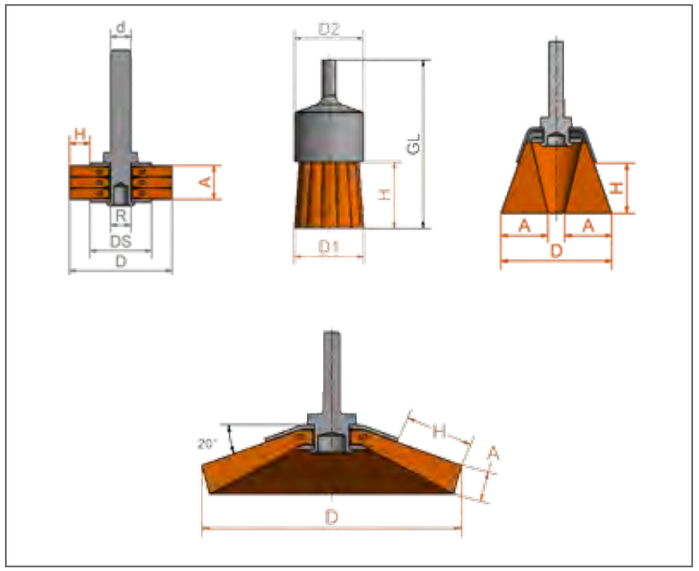

Sender: Company, contact person

Piece number _____

Brush Application ☐ dry ☐ wet

- ☐ derusting
- ☐ removing paint
- ☐ deburring
- ☐ cleaning
- ☐ roughening / structuring
- ☐ weld dressing
- ☐ others _____

Material to be treated ____°C Temperature

- ☐ steel
- ☐ aluminium
- ☐ wood
- ☐ stainless steel
- ☐ plastic
- ☐ others _____

Filling material

- ☐ crimped ☐ knotted
- ☐ steel
- ☐ brass coated steel
- ☐ brass
- ☐ stainless steel
- ☐ polyamide
- ☐ abrasive filament (SIC)

Besatzstärke _____

Please indicate the dimensions according to the technical drawing (mm): (shank standard 6 mm)

D	Diameter	_____	mm
H	trim hight	_____	mm
A	working width	_____	mm
GL	overall length	_____	mm
D2	Housing diameter	_____	mm

Used machine

- ☐ hand-operated machine (e.g. angle grinders)_____
- ☐ stationary machine (z.B. CNC)_____
- ☐ others _____

machine data

max. speed _____

Inquiries and Infos:
Phone: +49 9082 707-0 info@lessmann.com
Fax: +49 9082 707-76 www.lessmann.com

Enquiry for Wheel and Interior Brushes

Drawing / description of application

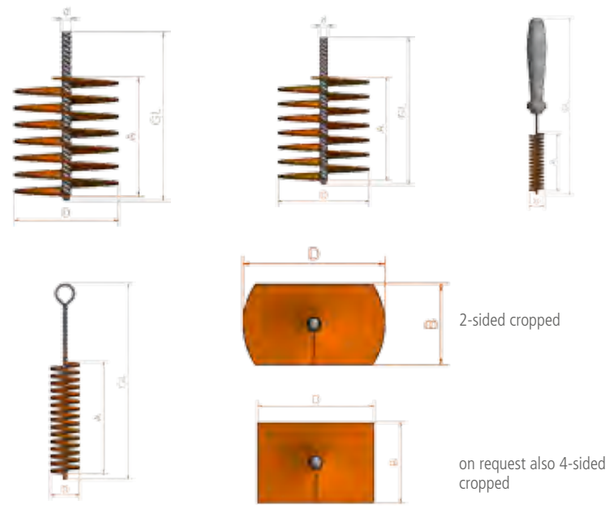

Sender: Company, contact person

Piece number _____

Brush Application ☐ dry ☐ wet

- ☐ derusting
- ☐ deburring
- ☐ cleaning
- ☐ others _____

Material to be treated ____°C Temperature

- ☐ steel
- ☐ aluminium
- ☐ stainless steel
- ☐ plastic
- ☐ others _____

Filling material

- ☐ steel
- ☐ brass coated steel
- ☐ brass
- ☐ stainless steel
- ☐ polyamide
- ☐ abrasive filament (SIC)
- ☐ abrasive filament (AO)
- ☐ others _____

Diameter for filling material _____

Please indicate the dimensions according to the technical drawing (mm):

D Diameter _____ mm

d core wire _____ mm

A working width _____ mm

GL overall length_____ mm

Commitment

- ☐ manually
- ☐ machine _____

Bürstennahme

- ☐ shank _____ mm
- ☐ thread _____

Inquiries and Infos:
Phone: +49 9082 707-0 info@lessmann.com
Fax: +49 9082 707-76 www.lessmann.com

Purchase Order Form

Supplier
Lessmann GmbH
Lucas-Schultes-Str. 2
D-86732 Oettingen

Buyer
_____
_____
_____
_____

Date _____
Customer Number _____
Contact Person _____
Phone _____
E-Mail _____

Order Number: _____

Item Number	Article Name	Quantity	Price	Discount	Date of Delivery

Shipping Address (if different from above):
_____
_____
_____
_____

Billing Address (if different from above):
_____
_____
_____
_____

☐ **Yes, please electronic order confirmation to be sent to: E-Mail** _____

☐ **Yes, please electronic invoice to be sent to: E-Mail** _____

For more information about our brush selection please visit our website www.lessmann.com/Products

We hereby accept the current „General Conditions of Sale and Delivery" of Lessmann GmbH as printed in the Lessmann catalogue on page 164 available to us.

_____
Buyer's Signature / Stamp

Lessmann GmbH | Lucas-Schultes-Str. 2 | D-86732 Oettingen i. Bayern
Phone: +49 (0) 9082 707 0 | Fax: +49 (0) 9082 707 78
Info@lessmann.com | www.lessmann.com

General Conditions of Sale and Delivery

1. Scope
(1) Our general conditions of sale apply exclusively; we do not acknowledge any conditions of the customer which are contrary to or deviate from our general conditions of sale, unless we explicitly consented in writing to their validity.
(2) All agreements reached between us and the customer for the purpose of carrying out this contract must be made in writing. This applies also to offers and orders which were agreed with our sales representatives.
(3) Our general conditions of sale shall apply only to commercial businesses, not to private consumers.

2. Offer
(1) All prices contained in an offer are subject to alterations. The prices are valid as fixed prices for 6 months, only after acknowledgement of the order.
(2) We reserve rights of ownership and copyrights on diagrams, drawings, design worksheets and other documents; they must not be made accessible to third parties.

3. Prices – Terms of Payment
(1) All prices are in € (EURO), ex works Oettingen, exclusive costs of packaging.
(2) Our prices do not include Value-Added Tax.
(3) Unless stated otherwise in the acknowledgement of the order we grant 2% cash discount on payments in cash made within 10 days after the date of the invoice, payments shall be made within 30 days from the date of the invoice.
(4) In case of a delayed payment, we are entitled to demand interest at a rate of 4% p.a. above the actual basis rate of the EZB.

4. Period of Delivery – Despatch – Delivery on Demand
(1) Our liability in cases of delayed delivery is limited to cases of intent and gross negligence.
(2) In case of delayed delivery the customer has to set us an appropriate time limit for the delivery. If we have not delivered by that date the customer has the right to withdraw from the contract. Customer's rights to claim damages is limited to the extent of the foreseeable damage and to cases of intent and gross negligence. In other cases the right to claim damages is limited to the amount of the contract price.
(3) The limitations according to paragraphs (1) and (2), shall not apply in case a delivery at a fixed time has been agreed, or if the customer has lost its interest in the delivery due to the delay.
(4) We will keep our delivery obligations on condition that the customer will keep its obligations correctly and in time.
(5) Unless otherwise agreed we will take care of the most favourable way of transport at our own discretion on account and at the risk of customer. This shall also apply to carriage paid and FOB deliveries.
(6) If delivery on demand has been agreed we may buy the material necessary to produce the complete order and we may produce the complete quantity immediately.

5. Warranty for Defects – Liability
(1) The customer shall examine our deliveries immediately and report complaints about defects immediately. We can only be held responsible for defects if the customer has correctly fulfilled this obligation.
(2) In case of defects we will either remedy the defect or replace the product by a not defective one. In case we replace the product we will pay the additional expenses. We will bear transport costs for the transport not farer than to the place of performance. In case of delayed delivery the customer has the option of either withdrawing from the contract or demanding a reduction in the price. Customer has no further claims. Our liability is not limited in cases of intent, gross negligence, undertaking of a guarantee, violation of an obligation non compliance with which would endanger the purpose of the contract, for damages caused by injury to life, body or health and for claims based on the German product liability law (Produkthaftungsgesetz).
(3) Any and all claims against us are subject to a limitation period of 12 months from delivery. This does not apply as far as §§ 438 subpar. 1 No 2, 479 subpar. 1 and 634a subpar. 1 No 2 of the German Civil Code lays down a longer period or if we are liable due to intent or gross negligence.

6. Reservation of Ownership
(1) The customer shall obtain ownership of the delivered products only after we have received all payments from the business relationship with the customer.
(2) In the event of seizures or other actions by third parties, the customer shall inform us thereof immediately in writing. As far as the third party is not able to reimburse our total costs of legal action in accordance with paragraph 771 of the German Code of Civil Procedure, the customer shall reimburse us the loss.
(3) The customer is entitled to sell the products. The customer shall assign all rights and titles arising from the further sale to us regardless of wheth er the products have been processed or not. The customer remains entitled to collect the payments from the sales. We shall not collect any payments except the customer is behind with payments and/or has gone bankrupt and/or has stopped payments.
(4) Any processing, marking or other changes of the products by the customer shall be done on our behalf. If we have to take back the products, the customer shall give us the name and address of the customer who wished the products to be processed, marked or changed.
(5) We shall, at the request of customer, release our rights and titles up to the amount which exceeds 20% of the value of our payment claim to be protected. The selection of the rights and titles to be released shall be at our discretion.

7. Place of Jurisdiction – Place of Performance – Law
(1) Place of jurisdiction shall be the place of our office. We also may take proceedings against the customer at the place of its office.
(2) Our office is the place of performance, unless our acknowledgement of the order stated something different.
(3) The laws of the Federal Republic of Germany shall apply. The United Nations Convention on Contracts for the International Sale of Goods (CISG) shall not apply.

8. Miscellaneous
(1) Special designs can not be taken back. Our deliveries may deviate from the agreed volume by +/- 15%.
(2) The minimum order value, as well as extra payments for small volume purchases, are fixed in the actual price list.
(3) Quantities deviating from the standard packet will be increased or decreased to the corresponding standard packet, otherwise extra payments per incomplete packet will be charged in accordance with the actual price list.

Minimum order value:
For stock articles (**bold printed** articles):
net € 100.00

For special production and *italic printed* articles:
net € 250.00 / article

Extra payment for incomplete packets:
net € 3.50

Express delivery on extra charge available.

We reserve the right to change the construction and design of the brushes in the course of further technical developments. Information to measurements are approximate and not binding. All measurements are in mm.

The LESSMANN free dimension tolerances apply. Request these if necessary.

Note

Article Numbers

Art. No.	Page
000041	41
000042	41
000043	41
000044	41
000045	41
000051	146
000071	123
000072	123
000311	97
000321	97
000323	97
000331	97
000501	133
000503	133
000506	133
000507	133
000631	41
000641	41
000651	41
000661	41
000671	41
001211	123
001212	123
001215	123
001222	123
001225	123
037101	97
037200	97
037201	97
037221	97
037710	97
045301	125
045910	125
045915	125
047700	139
047705	139
047707	139
047708	139
047750	139
047754	139
047755	139
047757	139
047763	139
047764	139
047765	139
047801	139
048241	51
048271	51
048291	51
048441	51
048471	51
048491	51
048701	51
048821	51
048841	51
048851	51
048901	51
048941	51
048998	51
048999	51
051021	154
051324	154
051348	154
051360	154
051547	154
051558	154
052860	154
052868	154
052881	154
052891	154
056001	89
056301	89
056501	89
056701	89
061101	97
064050	97
00088663	41
00088664	41
00088665	41
00088668	41
00088832	41
100011	87
100020	87
100021	87
100030	87
100031	87
100040	87
100041	87
100050	87
100051	87
100061	87
102431	87
102441	87
102611	87
102621	87
102631	87
102641	87
102651	87
102661	87
103711	87
103721	87
103731	87
103741	87
103751	87
103761	87
104321	87
104331	87
104341	87
104351	87
104421	87
104431	87
104441	87
104451	87
104611	87
104621	87
104630	87
104631	87
104640	87
104641	87
104651	87
104661	87
105420	87
105421	87
105431	87
105440	87
105441	87
105451	87
105461	87
105721	87
105731	87
105741	87
106621	87
106631	87
106641	87
106651	87
107321	87
107331	87
107341	87
107351	87
107411	87
107421	87
107431	87
107441	87
107451	87
107461	87
107611	87
107621	87
107631	87
107641	87
107651	87
107661	87
108041	64, 87
108331	64, 87
108341	64, 87
108351	64, 87
109431	87
109441	87
109451	87
109741	87
120401	89
120412	89
120413	93
120423	93
120433	93
120443	93
120601	89
120801	89
120811	89
120831	89
121111	96
121211	96
122401	89
122771	64, 89
122801	89
122821	64, 89
122871	64, 89
124101	101
124121	101
124181	64, 101
124201	101
124301	101
124401	101
124801	101
124841	101
125111	90
125201	90
125211	90
125221	90
125231	90
125234	90
125241	90
125251	90
125311	90
125511	90
125521	90
126311	91
126401	91
126411	91
126431	91
126441	91
126451	91
126472	91
126481	91
126511	91
126611	91
126811	91
132701	91
132801	64, 90
135455	93
136101	89
136102	89
136103	89
137701	91
138469	93
138704	91
138705	91
140201	95
140641	95
140811	95
140901	95
141231	95
141421	95
142101	97
142211	97
144001	96
144011	65, 96
144021	96
144111	65, 96
144121	96
144211	96
144311	65, 96
144411	65, 96
144701	96
146101	99
146201	99
146270	64, 99
146301	99
147101	99
147200	99
147201	99
147261	99
147301	99
147401	99
148101	99
148141	99
148161	99
148170	64, 99
148201	99
148601	99
151108	103
151109	103
151511	103
152510	103
152811	65, 95
182001	90
182152	91
182162	91
182172	91
182331	90
182401	88
182411	88
182421	88
182431	88
182451	88
182807	91
182811	91
183704	91
183706	91
184101	125
184104	125
184412	125
185121	88
185131	88
185141	88
185151	88
185421	88
185431	88
185441	88
185451	88
185621	88
185631	88
185641	88
185651	88
185811	89
186431	88
300091	37
300102	129
300742	37
310141	28
310161	28
310341	29
310361	29
310831	27
310841	27
310851	27
310871	27
311762	37
312141	37
312142	31
312143	31
312162	31
312163	31
312342	32
312362	32
312363	32
312542	33
312543	33
312562	33
312563	33
320001	37
320003	37
320004	37
320009	37
320061	39
320102	129
320141	28
320161	28, 37
320341	29
320361	29
320707	28
320821	27
320831	27
320841	27
320851	27
320871	27
323002	37
323003	37
323132	31
323133	31
323142	31
323143	31
323162	31
323163	31
323342	32
323343	32
323362	32
323363	32
323542	33
323543	33
323562	33
323563	33
330001	37
330141	28
330161	28
330341	29
330361	29
330821	27
330841	27
330851	27
330871	27
331161	28
331341	27
331361	29
334132	31
334142	31
334143	31
334162	31
334163	31
334342	32
334343	32
334362	32
334363	32
334542	33
334543	33
334562	33
340141	28
340161	28
340341	29
340361	29
340707	28
340821	27
340831	27
340841	27
340851	27
340871	27
344132	31
344133	31
344142	31
344143	31
344172	31
344173	31
344342	32
344343	32
344362	32
344363	32
344542	33
344543	33
344562	33
344563	33
344662	33
345051	39
345132	31
345133	31
345142	31
345143	31
345162	31
345163	31
345342	32
345343	32
345362	32
345363	32
345542	33
345543	33
345562	33
345563	33
345762	31
345822	32
345852	32
350141	28
350161	28
350341	29
350361	29
350821	27
350831	27
350841	27
350851	27
350871	27
351141	28
351161	28
351341	29
351361	29
351707	28
351841	27
351851	27
351871	27
355133	31
355142	31
355143	31
355162	31
355163	31
355342	32
355362	32
355363	32
355542	33
355543	33
355562	33
355563	33
355762	31
360141	28
360161	28
360341	29
360361	29
360707	28
360831	27
360841	27
360851	27
360871	27
361141	28
361161	28
361341	29
361361	29
361821	27
361831	27
361841	27
361851	27
361871	27
362141	28
362161	28
362272	28
362341	29
362361	29
362707	28
362831	27
362841	27
362851	27
362852	27
362871	27
365132	31
365133	31
365142	31
365143	31
365172	31
365173	31
365342	32
365343	32
365362	32
365363	32
365542	33
365543	33
365562	33
365563	33
365763	31
366142	31
366143	31
366162	31
366163	31
366342	32
366343	32
366362	32
366363	32
366542	33
366543	33
366562	33
366563	33
366762	31
370141	28
370161	28
370272	28
370341	29
370361	29
370841	27
370851	27
370852	27
370871	27
371141	28
371161	28
371341	29
371361	29
371841	27
371851	27
371871	27
372831	27
372841	27
372851	27
372871	27
376142	31
376162	31
376163	31
376342	32
376343	32
376362	32
376363	32
376542	33
376543	33
376562	33
377043	45
377044	46
377045	45
377047	46
377048	45
377049	46
377051	45
377052	45
377053	45
377054	45
377059	45
377063	45
377066	45
377077	45
377089	46
377090	46
377091	47
377093	46
377094	46
377095	45
377096	45
377097	46
377099	46
377142	31
377143	31
377144	31
377162	31
377163	31
377164	31
377342	32
377343	32
377362	32
377363	32
377562	33
377707	46
377762	31
377824	47
377835	47
377837	47
377839	47
377854	47
377875	47
380141	28
380161	28
380341	29
380361	29
380841	27
380851	27
380871	27
381161	28
381361	29
381831	27
381841	27
381851	27
381871	27
387051	45
387053	45
387054	45
387055	45
387142	31
387143	31
387162	31
387163	31
387342	32
387343	32
387362	32
387363	32
387562	33
387824	47
388172	31
388173	31
397142	31
397143	31
397172	31
397173	31
397362	32
397562	33
402780	35
402880	35
402881	35
402882	35
402883	35
402890	35
402891	35
402892	35
402893	35
405006	146
405835	146
405843	35, 146
405844	35, 146
405845	35, 146
405854	146
405864	146
405905	146
405908	146
410031	83
410032	83
410033	83
410122	128
410123	128
410132	128
410133	128
410134	128
410135	128
410136	128
410138	128
410152	128
410153	128
410154	128
410155	128
410156	128
410158	128
410159	128
410173	128
410183	128
410185	128
410221	83
410222	83
410223	83
410321	83
410322	83
410323	83
410521	83
410522	83
410523	83
410801	83
410802	83
410803	83
410871	83
410872	83
410873	83
410881	83
410882	83
410883	83
410891	83
410892	83
410893	83
411132	70
411142	70
411342	71
411542	73
412731	72
412731	72
413132	70
413133	70
413142	70
413143	70
413162	70
413163	70
413342	71
413343	71
413362	71
413363	71
413542	73
413543	73
413841	73
413871	73
414132	70
414133	70
414142	70
414143	70
414162	70
414163	70
414192	70
414193	70
414342	71
414343	71
414362	71
414462	71
414542	73
414543	73
414752	72
414842	73
414872	73
415132	70
415133	70
415142	70
415143	70
415160	69
415162	70
415163	70
415192	70
415193	70
415301	71
415302	71
415342	71
415343	71
415362	69
415362	71
415363	71
415462	71
415542	73
415543	73
415741	72
415741	72
415752	72
415753	72
415842	73
415852	73
415872	73
416132	70
416133	70
416142	70
416143	70
416160	69
416162	70
416163	70
416193	70
416302	71
416303	71
416342	71
416343	71
416362	71
416363	71
416462	71
416542	73
416543	73
416752	72
416842	73
416842	73
416852	73
416852	73
416872	73
416872	73
417132	70
417133	70
417142	70
417143	70
417160	69
417162	70
417163	70
417168	69
417192	70
417198	69
417199	69
417306	71
417309	71
417342	71
417343	71
417362	71
417363	71
417398	69
417399	69
417462	71
417542	73
417543	73
417752	72
417842	73
417852	73
417872	73
418142	70
418143	70
418162	70
418163	70
418192	70
418342	71
418343	71
418362	71
418363	71
418462	71
418542	73
418543	73
418704	72
418752	72
418803	72
418842	73
418852	73
418872	73
421147	58
421164	58
421167	58
421197	58
421364	58
421367	58
421564	58
421567	58
421767	58
421827	58
421857	58
422177	61
422367	61
422767	61
423167	58
423168	58
423367	58
423368	58
424147	58
424171	58
424177	58
424178	58
424197	58
424198	58
424361	58
424367	58
424368	58
424567	58
426147	58
426171	58
426177	58
426178	58
426191	58
426197	58
426198	58
426361	58
426367	58
426368	58
426567	58
426568	58
426701	58
426767	58
427147	58
427171	58
427177	58
427178	58
427297	58
427298	58
427367	58
427567	58
429171	58
429177	58
429178	58
429191	58
429197	58
429198	58
429367	58
430031	83
430032	83
430122	129
430123	129
430124	129
430125	129
430126	129
430128	75, 129
430129	75, 129
430132	129
430133	129
430134	129
430135	129
430136	129
430138	75, 129
430139	75, 129
430222	83
430223	83
430322	83
430323	83
430522	83
430523	83
430802	83
430803	83
430872	83
430873	83
430882	83
430883	83
430892	83
430893	83
434142	75
434162	75
434342	75
434345	75
434355	75
434362	75
434365	75
434542	75
435142	75
435162	75
435342	75
435345	75
435355	75
435362	75
435365	75
435542	75
435562	75
436162	75
436362	75
437142	75
437162	75
437342	75
437362	75
437542	75
446271	59
446277	59
446701	59
446771	59
446777	59
446827	59
446851	59
446857	59
447277	59
447827	59
447857	59
450031	83
450221	83
450311	83
450521	83
450801	83
450871	83
450881	83
450891	83
451131	78
451141	78
451160	77
451161	78
451162	78
451191	78
451192	78
451258	81
451278	81
451305	79
451341	79
451361	79
451362	79
451458	81
451478	81
451541	79
451542	79
451561	79
451562	79
451831	77
451851	77
451871	77
452131	78
452141	78
452160	77
452161	78
452191	78
452304	79
452341	79
452361	79
452541	79
452561	79
452703	78
452705	78
452751	78
452831	77
452851	77
453131	78
453141	78
453160	77
453161	78
453163	78
453191	78
453258	81
453278	81
453298	81
453301	79
453338	81
453341	79
453358	81
453361	79
453363	79
453378	81
453398	81
453541	79
453561	79
453703	78
453705	78
453751	78
453758	81
453778	81
453821	129
454238	81
454258	81
454278	81
454298	81
454338	81
454358	81
454378	81
454398	81
454758	81
454778	81
454831	77
454851	77
454871	77
455161	129
456131	78
456141	78
456160	77
456161	78
456163	78
456191	78
456258	81
456278	81
456298	81
456338	81
456341	79
456358	81
456361	79
456378	81
456398	81
456541	79
456561	79
456703	78
456705	78
456751	78
456758	81
456778	81
456831	77
456851	77
456871	77
458131	78
458141	78
458161	78
458191	78
458341	79
458361	79
458541	79
458561	79
460121	77
460122	77
466171	77
466172	77
469131	77
469133	77
469151	77
469153	77
469362	77
470111	17
470211	17
471117	17
471157	61
471217	17
471254	61
471257	61
471757	61
471817	17
471857	61
472111	17
472117	17
472157	61
472211	17
472217	17
472257	61
472711	17
472717	17
472757	61
472811	17
472817	17
472857	61
473111	17
473117	17
473211	17
473217	17
473257	61
473711	17
473811	17
473817	17
473857	61
474111	17
474117	17
474211	17
474217	17
474311	17
474317	17
474811	17
474817	17
475111	17
475117	17
475211	17
475217	17
475311	17
475317	17
475811	17
475817	17
476111	17
476211	17
476311	17
480117	55
480217	55
480717	57
482017	55
482027	55
482057	55
482114	55
482117	55
482214	55
482217	55
482317	55
482714	57
482717	57
482814	57
482817	57
483117	55
483217	55
483230	75
483317	55
483817	57
484117	56
484118	56
484217	56
484218	56
484311	56
484317	56
484318	56
484717	57
484718	57
484817	57
484818	57
485137	55
485237	55
485337	55
486111	56
486117	56
486118	56
486148	55
486211	56
486217	56
486218	56
486237	55
486248	55
486311	56
486317	56
486318	56
486348	55
486717	57
486718	57
486817	57
486818	57
487111	56
487117	56
487118	56
487211	56
487217	56
487218	56
487237	55
487248	55
487311	56
487317	56
487318	56
487817	57
488237	55
488238	55
488248	55
499907	132
499921	132
500010	115
500016	115
500308	115
500310	115
500312	115
500313	115
500314	115
500315	115
500316	115
500318	115
500319	115
500320	115
500508	115
500510	115
500512	115
500513	115
500514	115
500515	115
500516	115
500518	115
500519	115
500520	115
500708	115
500710	115
500712	115
500713	115
500714	115
500715	115
500716	115
500718	115
500719	115
500720	115
500808	115
500810	115
500812	115
500813	115
500814	115
500815	115
500816	115
500818	115
500819	115
500820	115
501301	115
501501	115
501701	115
501801	115
503311	112
503313	112
503314	112
503316	112
503318	112
504301	113
504302	113
504333	113
504334	113
504335	113
504346	113
504347	113
506101	116
506106	116
506130	116
506132	116
506135	116
506138	116
506140	116
506144	116
506150	116
506157	116
506163	116
506169	116
506174	116
506175	116
506182	116
506188	116
506194	116
506211	116
506220	116
506330	121
506340	121
506363	121
506401	116
506406	116
506411	116
506430	116
506432	116
506435	116
506438	116
506440	116
506444	116
506450	116
506457	116
506463	116
506469	116
506475	116
506482	116
506488	116
506494	116
506701	116
506706	116
506711	116
506720	116
506730	116
506732	116
506735	116
506738	116
506740	116
506744	116
506750	116
506757	116
506763	116
506769	116
506775	116
506782	116
506788	116
506794	116
506801	116
506806	116
506811	116
506820	116
506830	116
506832	116
506835	116
506838	116, 121
506840	116
506844	116
506850	116
506857	116
506860	121
506863	116
506869	116
506875	116
506882	116
506888	116
506894	116
507001	119
507002	119
507003	119
507004	119
507005	119
507006	119
507007	119
507105	117
507190	117
507301	122
507302	122
507303	122
507304	122
507305	122
507307	122
507308	122
507959	122
526101	116
526106	116
526111	116
526130	116
526132	116
526135	116
526138	116
526140	116
526144	116
526150	116
526157	116
526163	116
526169	116
526175	116
526182	116
526188	116
526194	116
529302	119
529311	119
529811	119
532202	119
532203	119
532205	119
532211	119
532218	119
532703	121
532716	121
532718	121
533405	117
533408	117
540067	107
540068	107
540069	107
540070	107
540071	107
540072	107
540073	107
540074	107
540075	107
540076	107
540077	107
540078	107
540225	117
540321	117
540323	117
540324	117
540325	117
540327	117
541037	107
541039	107
541045	107
541076	107
541077	107
541079	107
541083	107
541084	107
541085	107
541087	107
541089	107
541093	107
541095	107
541301	129
541372	117
541373	117
542034	65, 110
542301	111
542302	111
542303	111
542304	111
542305	111
542306	111
542307	111
542308	111
542309	111
542311	111
542313	111
542315	111
542317	111
542319	111
542320	111
542347	111
542351	111
542381	111
542501	111
542502	111
542503	111
542504	111
542505	111
542506	111
542507	111
542508	111
542511	111
542513	111
542515	111
542519	111
542520	111
542538	111
542541	111
542542	111
542562	79
542701	111
542702	111
542703	111
542704	111
542705	111
542706	111
542707	111
542708	111
542709	111
542711	111
542713	111
542715	111
542717	111
542719	111
542720	111

Art. No.	Page
542739	111
542740	111
542741	111
542801	111
542802	111
542803	111
542804	111
542807	111
542808	111
542811	111
542812	111
542813	111
542815	111
542818	111
542819	111
542820	111
542822	111
542823	111
542881	111
543006	65, 110
543926	65, 110
544301	120
544302	120
544307	121
544361	121
544804	120
545303	121
545307	120
545311	120
545312	120
545320	120
545321	120
545322	120
545331	121
545338	120
546302	122
546304	122
546306	122
546314	122
546318	122
546906	122
546908	122
547303	111
547307	111
547311	111
547313	111
547315	111
547703	111
547707	111
547711	111
547713	111
547715	111
547803	111
547807	111
547811	111
547813	111
547815	111
549101	117
549102	117
549103	117
549104	117
549105	117
549106	117
549107	117
549108	117
551801	120
551811	121
551812	121
552403	120
552404	120
552811	121
552816	121
553711	120
554903	120
559713	121
559802	110
559803	110
559804	110
559805	110
559806	110
559807	110
559810	110
560310	112
560315	112
560320	112
560325	112
560330	112
560510	112
560515	112
560520	112
560525	112
560530	112
560710	112
560715	112
560720	112
560725	112
560730	112
561304	112
562508	124
562510	124
562512	124
562515	124
562518	124
562522	124
562528	124
562535	124
563301	125
564101	120
564301	120
566601	123
566602	123
566603	123
566701	123
566702	123
566703	123
567201	123
567601	123
567671	123
567701	123
567731	123
567771	123
568802	123
568805	123
568806	123
570907	125
570910	125
599001	123
599002	123
599501	93
599503	93
599921	121
599931	121
599962	121
599991	121
15199107	103
15199507	103
15299507	103
30121310	37
30121315	37
30121320	37
30121330	37
30121415	37
30121420	37
30121430	37
30122515	37
30122520	37
30122525	37
30122530	37
30123620	37
30123630	37
30436114	61
30476114	61
31070206	37
31174201	37
32016113	37
32034119	35
32070319	35
32082119	35
32330519	35
32334819	35
32370419	35
32370519	35
32377013	35
32380519	35
32382013	35
32382819	35
32383013	35
32390010	35
33536114	61
33576114	61
37704300	45
37704400	46
37705100	45
37705300	45
37705326	45
37705327	45
37705400	45
37706300	45
37708900	46
37708926	46
37708927	46
37709100	47
37709400	46
37724030	49
37724046	49
37724060	49
37727030	49
37727046	49
37727060	49
37729030	49
37729046	49
37729060	49
37744030	49
37744046	49
37744060	49
37747030	49
37747046	49
37747060	49
37749030	49
37749046	49
37749060	49
37770700	46
37778030	49
37778046	49
37778060	49
37782400	47
37783030	49
37783046	49
37783060	49
37783500	47
37785400	47
37787500	47
38724046	49
38727046	49
38729046	49
38744046	49
38747046	49
38749046	49
38778046	49
38783046	49
38824046	49
38824060	49
38827045	49
38827046	49
38827060	49
38829046	49
38829060	49
38844046	49
38844060	49
38847046	49
38847060	49
38849046	49
38849060	49
38878046	49
38878060	49
38883046	49
38883060	49
41012307	132
41012309	130
41013307	132
41013309	130
41015209	130
41015307	132
41015309	130
41015807	132
41015809	130
41719807	132
41719809	130
41719811	69
42116409	130
42116707	132
42116709	130
42136709	130
42217709	130
42316709	130
42500001	63
42500101	63
42600001	63
42600101	63
43012209	130
43012307	132
43012309	130
43012607	132
43012609	130
43012807	132
43012809	130
43013307	132
43013309	130
43013807	132
43013809	130
45327809	130
45437809	130
45516107	132
45516109	130
47120728	21
47120828	21
47125707	132
47125709	130
47180728	22
47180828	22
47220132	21
47220139	21
47220732	21
47220832	21
47221107	132
47221109	130
47221709	130
47225709	130
47280132	22
47280139	22
47280732	22
47280832	22
47281109	130
47285709	130
47320140	21
47320740	21
47320840	21
47321124	17
47380140	22
47380740	22
47380840	22
47420148	21
47420748	21
47420848	21
47480148	22
47480748	22
47480848	22
47520148	21
47520156	21
47520176	21
47520748	21
47520756	21
47520776	21
47520848	21
47520856	21
47520876	21
47525001	63
47525101	63
47526001	63
47526101	63
47580148	22
47580156	22
47580176	22
47580748	22
47580756	22
47580776	22
47580848	22
47580856	22
47580876	22
47621051	17
47625001	63
47625101	63
47626001	63
47626101	63
47721075	17
47726001	63
47726101	63
47731075	17
47820006	19
47820008	19
47820010	19
47821075	17
47822506	19
47822508	19
47822510	19
47826001	63
47826101	63
47830006	19
47830008	19
47830010	19
47831075	17
47832506	19
47832508	19
47832510	19
47850006	19
47850008	19
48211709	130
48221409	130
48221707	132
48221709	130
48281709	130
50205024	115
50205224	115
50205524	115
50205824	115
50212003	133
50212024	116
50212224	116
50212524	116
50212824	116
50242024	116
50242224	116
50242524	116
50242824	116
50272024	116
50272224	116
50272524	116
50272824	116
50282024	116
50282224	116
50282524	116
50282824	116
50450106	113
50450206	113
50453206	113
50453306	113
50453406	113
50453506	113
50453606	113
50454606	113
50454706	113
50454806	113
50454906	113
50455006	113
50455106	113
50455206	113
50610103	133
50610160	117
50613003	133
50613060	117
50613503	133
50614003	133
50614060	117
50615003	133
50615060	117
50616060	117
50616303	133
50617503	133
50618060	117
50680560	117
52212024	116
52212224	116
52212524	116
52212824	116
52930124	119
52931160	119
53220203	133
53220303	133
53221460	117
53221860	117
53230360	117
53300824	119
53300924	121
53301024	119
54120042	108
54120055	108
54120060	108
54120080	108
54120100	108
54120130	108
54120160	108
54120190	108
54120200	108
54120220	108
54120250	108
54120280	108
54120300	108
54120320	108
54120380	108
54130107	132
54130109	130
54320022	108
54320026	108
54320032	108
54320042	108
54320055	108
54320060	108
54320080	108
54320100	108
54320130	108
54320160	108
54320190	108
54320220	108
54320250	108
54320280	108
54320300	108
54320320	108
54520012	108
54520019	108
54520022	108
54520026	108
54520032	108
54520042	108
54520055	108
54520060	108
54520080	108
54520100	108
54520130	108
54520160	108
54520190	108
54520220	108
54520250	108
54520280	108
54520300	108
54520320	108
56422060	109
56422080	109
56506100	109
56506130	109
56506160	109
56506200	109
56506250	109
56532100	109
56532130	109
56532160	109
56532190	109
56532210	109
56532240	109
56532250	109
56532290	109
56532320	109
56534100	109
56534130	109
56534160	109
56534190	109
56534200	109
56534210	109
56534250	109
56534290	109
56534320	109
56552100	109
56552130	109
56552160	109
56552190	109
56552250	109
56554160	109
56554190	109
56554200	109
56554250	109
56554290	109
56554320	109
56573080	109
56573100	109
56573130	109
56573160	109
56574200	109
56574250	109
56670701	123
60120420	142
60120430	142
60130420	142
60130430	142
60140420	142
60221420	142
60221430	142
60231420	142
60231430	142
60241420	142
60321420	142
60321430	142
60331420	142
60331430	142
60341420	142
60422520	142
60422530	142
60432520	142
60432530	142
60442520	142
60526520	142
60526530	142
60536520	142
60536530	142
60546520	142
35E136	39
37E137	39
35E146	39
36E146	39
37E146	39
37E147	39
36E176	39
037201CC	131
100021CC	131
100031CC	131
100041CC	131
100051CC	131
100061CC	131
104631CC	131
104641CC	131
107631CC	131
107641CC	131
120401CC	131
120801CC	131
120811CC	131
124801CC	131
125211CC	131
126411CC	131
126451CC	131
144001CC	131
144701CC	131
182401CC	131
182421CC	131
182451CC	131
185431CC	131
300771KG	23
32000K17	37
32001K17	37
32016K17	37
345662MS	65
351771KG	23
35E336	39
35E846	39
35E847	39
35E856	39
35E857	39
35E876	39
35E877	39
36E846	39
36E847	39
36E856	39
36E876	39
36E877	39
370241KG	46
370242KG	46
370271KG	46
370272KG	46
370441KG	46
370442KG	46
370471KG	46
370472KG	46
377043T1	45
377043TA	45
377044T1	46
377044TA	46
377051T1	45
377051TA	45
377053T1	45
377053TA	45
377054T1	45
377054TA	45
377063T1	45
377063TA	45
377089T1	46
377089TA	46
377094T1	46
377094TA	46
377707T1	46
377707TA	46
377824T1	47
377824TA	47
377835T1	47
377835TA	47
377854T1	47
377854TA	47
377875T1	47
377875TA	47
37E336	39
38T841	27
38T851	27
402880CC	131
405845CC	131
408819DB	39
408829DB	39
408839DB	39
410001SB	83
410001WB	83
410001ZH	83
410002SB	83
410002WB	83
410002ZH	83
410003SB	83
410003WB	83
410003ZH	83
410811DB	83
410812DB	83
410813DB	83
410871A0	83
410872A0	83
410873A0	83
410891A0	83
410892A0	83
410893A0	83
41Z143	70
41Z144	70
41Z163	70
41Z164	70
41Z343	71
41Z344	71
41Z363	71
41Z364	71
421167CC	131
421367CC	131
430001SB	83
430001WB	83
430001ZH	83
430002SB	83
430002WB	83
430002ZH	83
430812DB	83
430813DB	83
430872A0	83
430873A0	83
430892A0	83
430893A0	83
450001SB	83
450001WB	83
450001ZH	83
450821DB	83
450871A0	83
450891A0	83
451261BD	78
452261BD	78
453261BD	78
456261BD	78
47112K	18
47113K	18
47114K	18
471157SM	61
47122K	18
47123K	18
47124K	18
471257CC	131
47172K	18
47173K	18
47174K	18
47182K	18
47183K	18
47184K	18
47212K	18
47213K	18
47214K	18
472201EZ	21
472211CC	131
472211SM	17
472211WZ	17
47222K	18
47223K	18
47224K	18
472257SM	61
472257V4	61
472257WZ	61
47272K	18
47273K	18
47274K	18
472801EZ	22
472811WZ	17
47282K	18
47283K	18
47284K	18
472857WZ	61
47312K	18
47313K	18
47314K	18
473201EZ	21
473211SM	17
473211WZ	17
473217WZ	17
47322K	18
47323K	18
47324K	18
47372K	18
47373K	18
47374K	18
473801EZ	22
473811WZ	17
47382K	18
47383K	18
47384K	18
47412K	18
47413K	18
47414K	18
47422K	18
47423K	18
47424K	18
47472K	18
47473K	18
47474K	18
47482K	18
47483K	18
47484K	18
47512K	18
47513K	18
47514K	18
475201EZ	21
47522K	18
47523K	18
47524K	18
4752B176	23
4752W176	23
47572K	18
47573K	18
47574K	18
47582K	18
47583K	18
47584K	18
47612K	18
47613K	18
47614K	18
47622K	18
47623K	18
47624K	18
476250SM	63
476251SM	63
47672K	18
47673K	18
47674K	18
47682K	18
47683K	18
47684K	18
47712K	18
47713K	18
47714K	18
47722K	18
47723K	18
47724K	18
47772K	18
47773K	18
47774K	18
47782K	18
47783K	18
47784K	18
47812K	18
47813K	18
47814K	18
47822K	18
47823K	18
47824K	18
47872K	18
47873K	18
47874K	18
47882K	18
47883K	18
47884K	18
47S20176	21
47S211	17
482117SM	55
482217CC	131
482217SM	55
482217WZ	55
482817WZ	57
485237CC	131
485237SM	55
487011MS	56, 65
4K7161	75
4K7361	75
4K9161	75
4K9361	75

In the course of further technical developments, the right is reserved to change the construction and appearance of the brushes without prior notice. Indications of size are approximate and without obligation or recourse to third parties.

Bold printed item numbers
are always on stock.
Italic printed articles
as well as special brushes will be produced for you with a short delivery time.
Please also see our terms on page 164.

EAN

All packaging units are marked with an EAN Code. This symbol shows, which articles are marked with an EAN Code in particular.

Keyword Index

Article	Page
Accessoires Wheel Brushes	40 - 41
Adapter Sets	40 - 41
Adapter Threads	123
Band Saw Brushes	36 - 37
Barbecue Grill Brushes	92 - 93
Battery Terminal Brushes	125
Bevel Brushes	60 - 61
Blister packaging	130
Body Brushes	72
Boiler Brushes	118 - 120
Boiler Brushes-Sets	121
Bore Hole Cleaning Brushes	113
Brake Caliper Brushes ROKI	88
Bricklayer's Brushes	97
Brooms	98 - 99
Brushes for grass trimmers	62 - 63
Brushes for wood working	36 - 37
Brushes removing wet storage stain	94 - 95
Brushes wich are poor in spark	64 - 65
Brushes with carbon fibre	138 - 139
Chimney Brushes	119
Cup and Bevel Brushes	**52 - 65**
Cup Brushes, abrasive filament	58
Cup Brushes, brass coated steel wire	58
Cup Brushes, crimped wire	58
Cup Brushes, knotted	54 - 57
Cup Brushes with Shank	74 - 75
Cup Brushes, straight filament	59
Cutback Brushes	24 - 25
Cut Cases	131
Cylinder Brushes	110 - 111
Deburring Brushes	**42 - 51**
Deburring End Brushes	50 - 51
Deburring Wheel Brushes	44 - 47
Disc Brushes	145 - 147
Displaybox	132
DIY Brushes	**126 - 135**
Drive Arbors	40 - 41
Dusters	100 - 101
End Brushes, knotted	80 - 81
End Brushes with Shank	76 - 79
File Cards	97
File Cleaners	97
Fine Scratch Brushes	91
Fitting Brushes	124
Hand Brushes and Brooms	**84 - 103**
Hand Brushes Export Model	89
Hand Brushes Heavy Duty	89
Hand Brushes Rectangular and Violin	95
Hand Brushes Special Models	94 - 97
Hand Brushes Standard	87
Hand Brushes with Bracket	95
Hand Brushes with Plastic Handle	88
Hand Brushes with Scraper	89
Hand Brushes with Strap	95
Hand Brushes with Two-Components Handles	88
Handles and Extensions	123
Hanger assembly for tube brushes	133
HFB	140 - 143
Hole Cleaning Brushes	112
Industrial Brushes	**136 - 156**
Interior Brushes	**104 - 125**
Joint Cleaning Brushes	19
Knot Wheel Brushes	16 - 18
Lath Brushes	148 - 149
Low sparking Brushes	64 - 65
Metal Discs Spare Parts	40 - 41
Mikroabrasive Interior Brushes	107 - 108
Mikro Interior Brushes	109
Miniature Brushes	82 - 83
Packaging and Presentation	130 - 131
Pipeline Brushes	20 - 23
Plasterer's Brushes	97
Radiator Brushes	96
Rivet Brushes	89
Roughering Brushes	97
Roller Brushes	48 - 49
Rust Scratcher	125
Satinising Brushes	34 - 35
Scratchers	125
Scrubs	98 - 99
Shank Brushes	**66 - 83**
Single Segment Brushes	26 - 29
Sleeve Brushes	114 - 117
Small Diameter crimped Wheels	38 - 39
Soldering Fluid Brushes	125
Soldering Tip Brush	90
Soluble Oil Brushes	125
Spark Plug Brushes	90
Special shaped strip Brushes	156
Special Wheel Brushes	36 - 37
Spiked Rollers	97
Spiral or ring shaped strip Brushes	156
Staining Brushes	96
Staple Set Brushes	144
Stove Pipe Brushes	122
Stringer Bead Brushes	20 - 23
Strip Brushes	152 - 157
Stripping Brushes	36 - 37
Structuring Brushes	72
Tube Brushes	114 - 117
Universal Wire Brushes	89
Wax Polishing Brushes	96
Weed Brooms	102 - 103
Weed Brushes	102 - 103
Wheel Brushes	**14 - 41**
Wheel Brushes for the treatment of hard metal	38 - 39
Wheel Brushes with Shank	68 - 72
Wheel Brushes with Thread	60 - 61
Wide Face Brushes	150 - 151

More information...

... found on our homepage!
www.lessmann.com

Beside the variety of languages (german, english, spanish, czech, turkish and russian) we also provide you with useful information.

For example you can download:

- the complete article-number-catalogue-side-index
- enquiry forms of the different special brushes
- notes regarding the filling materials e.g. tables of the chemical and physical characteristics
- our brochure "Brush-Know-How"
- safety and operating instructions
- ISO 9001 certificate
- general terms and conditions

Please also ask for our special leaflets:

- Deburring with Brushes
  Art. No. 99EGBENG
- Interior Brushes / Miniature Brushes
  Art. No. 99INBENG
- Disc Brushes
  Art. No. 99TBDEUENG
- Brush Know How
  Technical Advice
  Art. No. 99BKHENG
- Strip Brushes Catalogue

LESSMANN®

LESSMANN®

THE GERMAN BRUSH COMPANY

MORE THAN 10.000 SOLUTIONS...

Due to our own engineering, tool and equipment design and our modern, also flexible, production facilities, we are able to produce special brushes in small and large batches.

CERTIFIED ACCORDING TO DIN EN ISO 9001:2015

Lessmann GmbH
Lucas-Schultes-Str. 2

86732 Oettingen
Germany

Tel.: +49 9082 707-0
Fax: +49 9082 707-78

www.lessmann.com
info@lessmann.com

QUALITY MADE IN GERMANY